Uncertainty analysis of emissions from the Statoil Mongstad oil refinery

Kjell-Eivind Frøysa[1], Anne Lise Hopland Vågenes[2], Bernhard Sørli[2] and Helge Jørgenvik[2]

[1]Christian Michelsen Research AS, Box 6031 Postterminalen, N-5892 Bergen, Norway.
[2]Statoil Mongstad, 5954 Mongstad, Norway

ABSTRACT

In new European and national legislations, there is increased focus on the reporting of the emmissions related to greenhouse gases from process plants. This includes reporting and documentation of uncertainty in the reported emmissions, in addition to specific uncertainty limits depending on the type of emission and type of measurement regime.

In a process plant like the Statoil Mongstad oil raffinery, there may be a huge number of measurement points for mass flow. These measured mass flow rates have to be added in order to obtain the total emission for a given source. Typically, orifice plates are used at many of the measurement points. These orifice plate meters are ususally not equipped with individual densitometers. In stead, they are pressure and temperature corrected from a common upstream densitometer. This will give correllations between the individual flow meters.

In the present paper, the flow meter set-up for Statoil Mongstad will be briefly addressed. thereafter, an uncertainty model suitable for the CO_2 emission from the Statoil Mongstad oil raffinery will be presented, included a practically method for handling the partial correllation between the uncertainty of the various flow meters. This model will comply with the ISO 5168 for measurement uncertainty. Various uncertainty contributions will be reviewed, in order to work out an uncertainty budget for the specific emission sources. From these results and the use of a specially developed calculation tool, improvements on the instrumentation have been suggested in order to reduce the uncertainty, both in a short and a long time range. In particular, it is necessary to plan the flow metering instrumentation so that the uncertainty is maintained also for the new gas flow regime that will appear when the new gas power plant at Statoil Mongstad is ready.

1. INTRODUCTION

The refinery at Mongstad, north of Bergen, Norway has a capacity of 12 million tons crude oil and condensate per year. It is a medium complex refinery, which is medium sized and with high upgrading capacity. It is the largest refinery in Norway. The largest production is petrol, diesel, aviation petrol and other light petroleum products. The production of petrol at Mongstad is about one and a half time the total Norwegian consumption. Most of the production from the refinery is exported, especially to Europe.

Fig. 1 Overview over the Statoil Mongstad oil refinery

National and European regulations requires report of the CO_2 emissions from e.g. Mongstad, within given uncertainties [MRG, 2007], [SFT, 2007]. The uncertainty of the reported CO_2 emissions has to be documented. If the uncertainty is not within the requirements, the authorities can give orders on specified improvements in order to reduce the uncertainty.

The uncertainty requirement is classified in Tiers. These put requirements to the uncertainty in the reported values of activity data (mass consumption of fuel gas) and in carbon factor (quantity

CO_2 produced when burning a given quantity if gas). Tier 4 is the highest tier-approach, and Tier 1 the lowest tier approach. For emissions larger than 500 000 ton/year, the highest Tier shall be used for all major source streams. The reporting to the authorities are typically pr energy carrier.

The fuel gas at Statoil Mongstad is under Tier 4. The uncertainty limits under Tier 4 are different depending on the type of gas. For fuel gas, Tier 4 gives an uncertainty limit of 1.5 % for activity data, and 0.5 % for carbon factor, both with 95 % confidence level. The flare gas at Statoil Mongstad is under Tier 3, which is the highest Tier for that gas type. Here the uncertainty limits are 7.5 % for activity data, and 2.5 % for carbon factor.

The main part of this paper discusses the uncertainty in the activity data (Section 3 and 4). Some considerations regarding the uncertainty of the carbon factor has also been given in Section 5.

2. INSTRUMENTATION AND REPORTING AT STATOIL MONGSTAD

The CO_2 emission at Statoil Mongstad originates from a variety of different sources. A variety of mass flow measurements of fuel gas are carried out throughout the refinery. The CO_2 emissions are calculated from the activity data and the carbon factor. For the reporting of the CO_2 emission, the various fuel gas flows are grouped together in some groups (for 2006: five groups), based mainly on energy carrier. The various sources thus have different gas composition in the fuel gas.

The various mass flows are measured by different flow metering principles. These include

- Orifice plates
- Venturi meters
- Annubar differential pressure meters
- Coriolis meters
- Ultrasonic flare gas meters

In addition, some small gas flows are estimated, and a fixed number is used. By far the most commonly used mass flow meter principle at Statoil Mongstad is the orifice plate. The density is typically measured far upstream the orifice plates, and calculations are carried out in order to compensate for the pressure and temperature differences from the densitometer to the orifice plate.

3. UNCERTAINTY MODEL

The uncertainty model for a given source (group of mass flows) consists of the uncertainty model for the various individual flow meters, and a model for the sum of the various flow meters. This includes the evaluation of correlated and uncorrelated contributions between the different flow meters. It should be mentioned that the final uncertainty model does not only depend on the type of flow meters, but also on the operation of the various flow meters. This will be illustrated below.

As an illustrating example, it is here chosen to show the uncertainty model for the sum of the flow through two orifice plates. It is assumed in the example that upstream the two orifice plates, the gas density is measured, in addition to the pressure and temperature. Downstream the densitometer, the gas is split into two pipes, and orifice plates measure the flow through each of them. The gas composition is thereby the same for the gas through both orifice plates. In order to find the gas density upstream each of the two orifice plates, the pressure and temperature upstream the two orifice plates is to be used. This is either measured or estimated by other means.

The uncertainty model should cover both cases. It should here be mentioned that in the calculation of density at upstream orifice conditions, ideal gas law is assumed. this is because of the low pressure at similar installations at Statoil Mongstad.

The uncertainty model can be further extended to several orifice plates and to combinations of various flow meter technologies, included correlations between some and not all the flow meters.

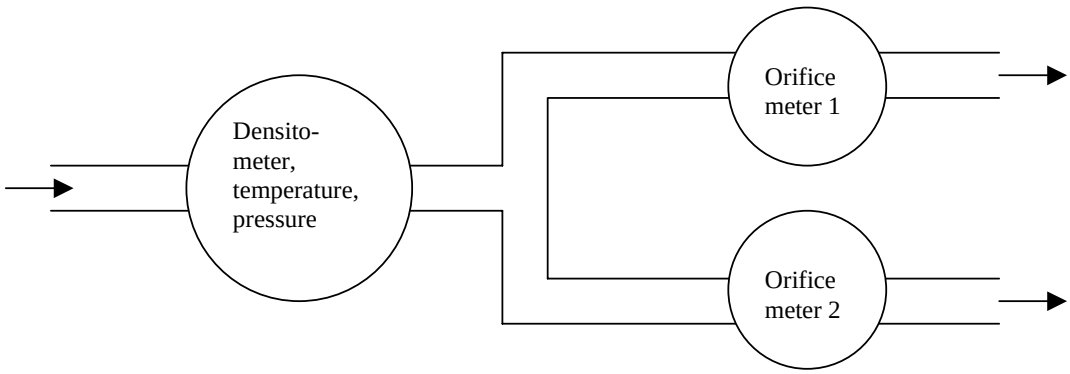

Fig. 2 Metering configuration for the illustrative example

3.1. Orifice plate uncertainty model

It is well known that in the flow-metering situation using orifice plates, measurement of differential pressure over the orifice plate is carried out. In addition, pipe and orifice diameter, discharge coefficient, expansibility factor and upstream gas density are needed. The functional relationship for the mass flow rate is in this case:

$$q_m = \frac{C}{\sqrt{1-(d/D)^4}}\,\varepsilon\,\frac{\pi}{4}\,d^2\sqrt{2\rho_M \Delta P} \qquad (1)$$

where

q_m	mass flow rate
C	discharge coeffisient
ε	expansibility coeffisient
d	orifice diameter, at line conditions
D	pipe diameter, at line conditions
ρ_M	density upstream the orifice plate
ΔP	differential pressure over the orifice plate

In the example to be discussed here, the density is determined from the measured density at densitometer conditions, and pressure and temperature corrections to the conditions upstream the orifice plate:

$$\rho_M = \rho_0 \frac{P_M T_0}{P_0 T_M} \qquad (2)$$

where

ρ_0	density at densitometer conditions
T_0	absolute temperature at densitometer conditions

P_0	pressure at densitometer conditions
T_M	absolute temperature upstream orifice plate
P_M	pressure upstream orifice plate

The relative standard uncertainty of the mass flow rate measured by an orifice plate, can now be found using [ISO 5167] in addition to the extra terms from the temperature and pressure calculations for the density from densitometer to orifice plate conditions:

$$\begin{aligned}\left(\frac{u(q_m)}{q_m}\right)^2 &= \left(\frac{u(C)}{C}\right)^2 + \left(\frac{u(\varepsilon)}{\varepsilon}\right)^2 + \left(\frac{2\beta^4}{1-\beta^4}\right)^2\left(\frac{u(D)}{D}\right)^2 \\ &+ \left(\frac{2}{1-\beta^4}\right)^2\left(\frac{u(d)}{d}\right)^2 + \frac{1}{4}\left(\frac{u(\Delta P)}{\Delta P}\right)^2 + \frac{1}{4}\left(\frac{u(\rho_0)}{\rho_0}\right)^2 \\ &+ \frac{1}{4}\left(\frac{u(P_0)}{P_0}\right)^2 + \frac{1}{4}\left(\frac{u(T_0)}{T_0}\right)^2 + \frac{1}{4}\left(\frac{u(P_M)}{P_M}\right)^2 + \frac{1}{4}\left(\frac{u(T_M)}{T_M}\right)^2\end{aligned} \tag{3}$$

It should be mentioned that it here is assumed that all uncertainty contributions (from discharge coefficient, expansibility coefficient, diameters, differential pressure, measured density, pressure and temperature) are here assumed to be mutually uncorrelated.

3.2. Correlations

A typical situation to be addressed when adding several mass flow rate measurements into a single number is the issue of correlation between the various measured flow quantities. This is briefly addressed in the EU guidelines [MRG, 2007], where the formulas for uncertainty for a sum and a product are given, when the various terms/factors are either uncorrelated or fully correlated. However, these models are too simple to be used in practice in a situation where partial correlation between two or more measured flow rates exist. Therefore, two more extensive methods that cover such situations will be presented here. These are the covariance method and the decomposition method.

The ***covariance method*** is the classical way of treating partial correllation between quantities. It is recommended in ”Guide to the expression of uncertainty in measurement” [ISO, 1995]. In short, it can be presented in the following way: Let

$$z = f(x, y) \tag{4}$$

The standard uncertainty in $u(z)$, is to be expressed by the standard uncertainties of x and y ($u(x)$ og $u(y)$). The classical approach is as follows

$$u(z)^2 = \left(\frac{\partial f}{\partial x}u(x)\right)^2 + \left(\frac{\partial f}{\partial y}u(y)\right)^2 + 2r(x,y)\frac{\partial f}{\partial x}\frac{\partial f}{\partial y}u(x)u(y) \tag{5}$$

where $r = 0$ if x and y are fully uncorrellated and $r = 1$ if x and y are fully correllated. In general, r is a number between –1 and 1. By partial correllation, the r – value has to be determined. It may be a challenging task to do this determination in an objective way.

The ***decomposition method*** is used in ISO 5168, Annex J. It is here assumed that the contributions to the standard uncertainty in x and y originate from different sources of uncertainty. Some of these contributions can be correllated (r = 1) and other can be uncorrellated (r = 0) between x and y. in this way, the standard uncertainty in x and y can be written as

$$\begin{aligned} u(x)^2 &= u(x_C)^2 + u(x_U)^2 \\ u(y)^2 &= u(y_C)^2 + u(y_U)^2 \end{aligned} \tag{6}$$

where the indexes C and U denote the correllated and the uncorrellated contributions, respectively. The correllated and the uncorrellated uncertainty contributions are treated separately, with r set to 1 and 0, respectively. Then, the following formula is obtaind for the standard uncertainty in z:

$$u(z)^2 = \left(\frac{\partial f}{\partial x} u(x_U)\right)^2 + \left(\frac{\partial f}{\partial y} u(y_U)\right)^2 + \left(\frac{\partial f}{\partial x} u(x_C) + \frac{\partial f}{\partial y} u(y_C)\right)^2 \tag{7}$$

The advantage of this formula is that it is not necessary to determine a value for r. However, the various uncertainty contributions for x and y have to be studied and classified as either correllated or uncorrellated between x and y.

In the NFOGM, NPD and CMR handbook for ultrasonic gas flow metering stations [Lunde and Frøysa, 2001] this formalism is derived from a formal decomposition:

$$\begin{aligned} x &= x_C + x_U \\ y &= y_C + y_U \end{aligned} \tag{8}$$

This decomposition is just formal, and does not represent a physical interpretation. The correllated contributions to the uncertainty are there associated with x_C and y_C, and the uncorrellated contributions with x_U and y_U. It can be showns that

$$\begin{aligned} \frac{\partial f}{\partial x_C} &= \frac{\partial f}{\partial x_U} = \frac{\partial f}{\partial x} \\ \frac{\partial f}{\partial y_C} &= \frac{\partial f}{\partial y_U} = \frac{\partial f}{\partial y} \end{aligned} \tag{9}$$

Now r = 1 is set for the correllation between x_C and y_C, and r = 0 between all the other variables. Then Eq. (7) is obtained.

It is possible to go do calculations from the decomposition method to the correlation method in the following way. Eq. (7) can be re-written as

$$\begin{aligned} u(z)^2 = &\left(\frac{\partial f}{\partial x}\right)^2 \left(u(x_U)^2 + u(x_C)^2\right) + \left(\frac{\partial f}{\partial y}\right)^2 \left(u(y_U)^2 + u(y_C)^2\right) \\ &+ 2\frac{\partial f}{\partial x}\frac{\partial f}{\partial y} u(x_C) u(y_C) \end{aligned} \tag{10}$$

By using Eq. (6), this can be written

$$u(z)^2 = \left(\frac{\partial f}{\partial x}\right)^2 u(x)^2 + \left(\frac{\partial f}{\partial y}\right)^2 u(y)^2 + 2\frac{\partial f}{\partial x}\frac{\partial f}{\partial y} u(x_C)u(y_C) \qquad (11)$$

This can further be written as

$$u(z)^2 = \left(\frac{\partial f}{\partial x}\right)^2 u(x)^2 + \left(\frac{\partial f}{\partial y}\right)^2 u(y)^2 + 2\frac{u(x_C)u(y_C)}{u(x)u(y)}\frac{\partial f}{\partial x}\frac{\partial f}{\partial y} u(x)u(y) \qquad (12)$$

which is Eq. (5) with the following expression for *r*:

$$r(x,y) = \frac{u(x_C)u(y_C)}{u(x)u(y)} = \frac{u(x_C)u(y_C)}{\sqrt{u(x_U)^2 + u(x_C)^2}\sqrt{u(y_U)^2 + u(y_C)^2}} \qquad (13)$$

It is thereby shown that these two methods are equivalent. In addition, the decomposition method provides a formula for calculation of *r*.

For the use in the example mentioned above with two orifice plates, each input uncertainty contribution has to be evaluated with respect to correllation or not between the two orifice plates in question. For this example, the following considerations have been made:

Discharge coefficient: Because the flow profiles are never quite the same in two independent installations, the uncertainty contributions from the discharge coefficients are uncorrelated between the two orifice plates.

Expansibility coefficient: Because flow profiles, pressure and temperatureare never the same in two independent installations, the uncertainty contributions from the expansibility factor are uncorrelated between the two orifice plates.

Pipe diameter: If the pipes at the two orifice plates are produced independently of each other (as when the pipe dimensions are different between the two orifice plate installations, the uncertainty contributions from the pipe diameter can be regarded as uncorrelated between the two orifice plates. However, if they are produced in the same batch of pipes, it may be more correct to regard them as being correlated. In the present work, they are considered to be uncorrellated.

Orifice diameter: The orifice plates are typically produced independently of each other. Often, the orifice plates are of different size, and they are measured by independent measurements. Therefore, they are regarded as uncorrelated between the two orifice plates. There may, however, be a small correlation between the two orifice plates when the same measurement system is used for measurement of the orifice diameter in the two plates. This is from the calibration of the measurement system. In the work reported here, this correlated contribution has been evaluated and found to be small enough to be neglected.

It should, however, be commented that there is a correlation between the pipe diameter and the orifice diameter on each orifice plate, from the common temperature expansion. This will be the case both if the temperature expansion is corrected for and if it is not. This is addressed in [Dahl

et al, 2003], where the covariance method is applied. In the present work, the equivalent decomposition method has been used.

Differential pressure: This quantity is measured by separate differential pressure transmitters for the two orifice plates. This uncertainty contribution is therefore considered to be uncorrelated between the orifice plates. However, due to common calibration facility for the two differential pressure transmitters, there will be a small correlation between the two orifice plates. In the work reported here, this correlated contribution has been evaluated and found to be small enough to be neglected.

Density at densitometer conditions: The density measured by the densitometer is used as input to both orifice metering stations. This uncertainty contribution is therefore correlated between the two orifice plates.

Pressure at densitometer conditions: This quantity is used as input to both orifice metering stations. This uncertainty contribution is therefore correlated between the two orifice plates.

Temperature at densitometer conditions: This quantity is used as input to both orifice metering stations. This uncertainty contribution is therefore correlated between the two orifice plates.

Pressure at upstream orifice conditions: If this is measured with separate dedicated pressure transmitters, they will be uncorrelated between the two orifice plates. However, due to common calibration facility for the two pressure transmitters, there will be a small correlation between the two orifice plates. In the work reported here, this correlated contribution has been evaluated and found to be small enough to be neglected. In the case where the pressure is not measured, but just estimated, the uncertainty may be correllated or uncorrelated between the two orifice plates, depending on the process in question. In the work presented here, the uncertainty contributions when the pressure is measured are considered as uncorrelated. This conclusion is supported by measurements campains at the plant.

Temperature at upstream orifice conditions: If this is measured with separate dedicated temperature transmitters, they will be uncorrelated between the two orifice plates. However, due to common calibration facility for the two temperature transmitters, there will be a small correlation between the two orifice plates. In the work reported here, this correlated contribution has been evaluated and found to be small enough to be neglected. In the case where the temperature is not measured, but just estimated, the uncertainty may be correllated or uncorrelated between the two orifice plates. In order to account for both these cases, the model will include both a correlated and an uncorrelated term for this quantity.

Based on the considerations above, the following uncertainty model can be specified for the uncertainty for the sum of the two mass flow rates measured by the two orifice plates, included correlations between the orifice plates:

$$
\begin{aligned}
\left(\frac{u(q_m)}{q_m}\right)^2 = \left(\frac{q_{m1}}{q_m}\right)^2 \Bigg\{ & \left(\frac{u(C_1)}{C_1}\right)^2 + \left(\frac{u(\varepsilon_1)}{\varepsilon_1}\right)^2 + \left(\frac{2\beta_1^{\,4}}{1-\beta_1^{\,4}}\right)^2 \left(\frac{u(D_1)}{D_1}\right)^2 \\
& + \left(\frac{2}{1-\beta_1^{\,4}}\right)^2 \left(\frac{u(d_1)}{d_1}\right)^2 + \frac{1}{4}\left(\frac{u(\Delta P_1)}{\Delta P_1}\right)^2 \\
& + \frac{1}{4}\left(\frac{u(P_{M1})}{P_{M1}}\right)^2 + \frac{1}{4}\left(\frac{u(T_{M,U1})}{T_{M,U1}}\right)^2 \Bigg\} \\
& + \left(\frac{q_{m2}}{q_m}\right)^2 \Bigg\{ \left(\frac{u(C_2)}{C_2}\right)^2 + \left(\frac{u(\varepsilon_2)}{\varepsilon_2}\right)^2 + \left(\frac{2\beta_2^{\,4}}{1-\beta_2^{\,4}}\right)^2 \left(\frac{u(D_2)}{D_2}\right)^2 \\
& + \left(\frac{2}{1-\beta_2^{\,4}}\right)^2 \left(\frac{u(d_2)}{d_2}\right)^2 + \frac{1}{4}\left(\frac{u(\Delta P_2)}{\Delta P_2}\right)^2 \\
& + \frac{1}{4}\left(\frac{u(P_{M2})}{P_{M2}}\right)^2 + \frac{1}{4}\left(\frac{u(T_{M,U2})}{T_{M,U2}}\right)^2 \Bigg\} \\
& + \frac{1}{4}\left(\frac{u(\rho_0)}{\rho_0}\right)^2 + \frac{1}{4}\left(\frac{u(P_0)}{P_0}\right)^2 + \frac{1}{4}\left(\frac{u(T_0)}{T_0}\right)^2 \\
& + \frac{1}{4}\left(\frac{q_{m1}}{q_m}\frac{u(T_{M,C1})}{T_{M,C1}} + \frac{q_{m2}}{q_m}\frac{u(T_{M,C2})}{T_{M,C2}}\right)^2
\end{aligned}
\tag{14}
$$

In this formula, the indexes U and C represent uncertainty contributions that are uncorrelated and correlated between the two orifice plates, respectively. Index 1 and 2 corresponds to the two orifice plates.

For simplicity, the terms handling the correlation between d and D due to temperature expansion are omitted. However, in the calculation example presented in Section 4, this effect is included.

3.3. Model for Source 1 at Statoil Mongstad

The total flow rate at each source at Statoil Mongstad is a sum of the measured flow rates at a variety of flow metering points. Here, one of these sources (here denoted as “Source 1”), with 16 orifice plates and one minor point where the flow rate is estimated, will be discussed. These 16 orifice plates have one common densitometer, similar to the situation discussed above. In Fig. 3, some details on this source are given, regarding densitometer position (marked with “D”), flow meter position (marked with “F”) and detailing of number of heaters and boilers.

A classification of correlated and uncorrelated contributions similar to the one carried out above, has been done for this source. The discussion is similar as above, but the more detailed and process plant specific details in the discussion will not be presented. Based on this discussion, a full uncertainty model for the whole source is established. This is similar to the model for two orifice plates discussed above, but extended to 16 orifice plates and one estimated point.

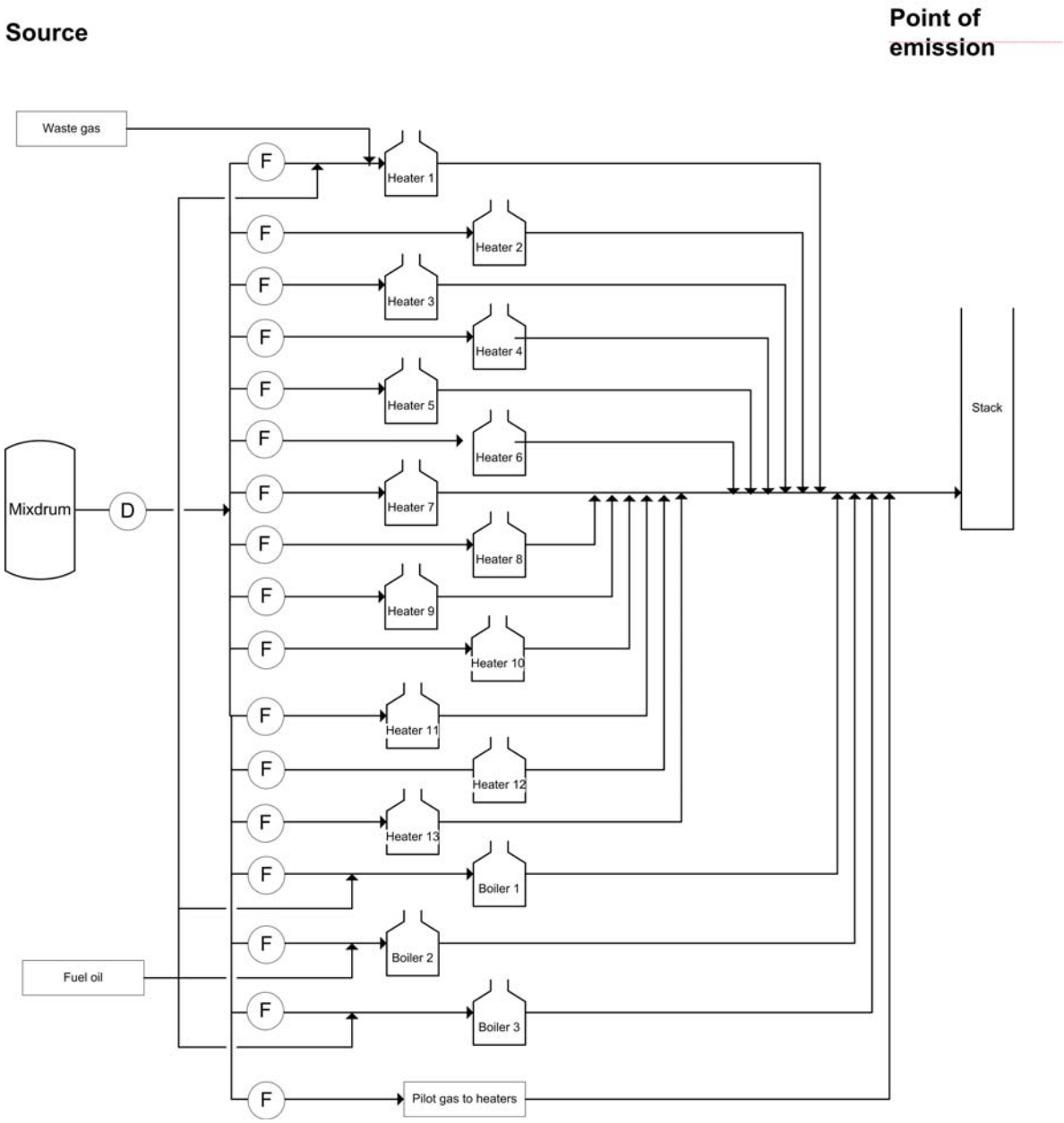

Fig. 3 Overview over Source 1. "D" denotes the location of the densitometer, and "F" denotes a mass flow meter.

4. CALCULATION EXAMPLE

4.1. Input uncertainties

An important issue in the uncertainty analysis, is the specification of the input uncertainties.

All the input uncertainty quantities should be documented based on vendor specifications or considerations based on the process in question. In cases where there may be doubt about the input specification, it is chosen to be on the conservative side, so that the uncertainty is not underestimated. The following considerations have been carried out:

Discharge coefficient: The orifice plates are installed according to ISO 5167. The quantity and the uncertainty of the discharge coefficient is therefore calculated according to ISO 5167.

Expansibility coefficient: The orifice plates are installed according to ISO 5167. The quantity and the uncertainty of the expansibility coefficient is therefore calculated according to ISO 5167. It should be mentioned that this quantity may be largely flow dependent, and should therefore be recalculated when the flow rate is changing.

Pipe diameter: Vendor specification.

Orifice diameter: Vendor specification.

Differential pressure: The uncertainty of the differential pressure measurement is calculated according to the Handbook [Dahl et al, 2003], with vendor specification and installation/calibration specifications for the differential pressure transmitter in question. Also this quantity may be largely flow dependent, and should therefore be recalculated when the flow rate is changing.

Density at densitometer conditions: The uncertainty of the density measurement is calculated according to the Handbook [Dahl et al, 2003], with vendor specifications for the densitometer in question. Velocity of sound correction is not carried out, and contributes therefore to increased uncertainty.

Pressure at densitometer conditions: This uncertainty is calculated according to the handbook [Dahl et al, 2003], with vendor specifications for the pressure transmitter in question.

Temperature at densitometer conditions: This uncertainty is calculated according to the handbook [Dahl et al, 2003], with vendor specifications for the temperature transmitter in question.

Pressure at upstream orifice conditions: For some orifice plates, the pressure is measured. In these cases, the uncertainty is calculated according to the Handbook [Dahl et al, 2003], with vendor specifications for the pressure transmitter in question. For the other orifice plates, the relative standard uncertainty is estimated to 5 % (10 % with 95 % confidence level), in order to be sure not to underestimate this quantity.

Temperature at upstream orifice conditions: For three of the orifice plates, there is a common temperature measurement. In this case, the correlated standard uncertainty of the temperature estimate is set to 0.5 °C, due to specifications of the temperature transmitter. The uncorrelated standard uncertainty is set to 1.5 °C in order to account for some uncorrected variation in temperature between the orifice plates. For the other orifice plates, the temperature is estimated. The standard uncertainty is here set to 5 °C correlated contribution and 5 °C uncorrelated contribution. This uncertainty specification is based on 3 measurement campains during 2006 at some orifice plates. The variation in temperature between the orifice plates, and over time give some input for estimating the uncertainty. In addition, there is accounted for some extra variation.

4.2. Results for 2006

The results for the uncertainty of source 1 have been calculated according to the model and input uncertainties described above. The results are shown in Fig. 4, where the uncertainty contribution

from each of the 16 orifice plates and the one estimated flow are shown, in addition to the relative expanded uncertainty for the source in total (for total flow measured from all the 17 measurement points). It can be seen that the relative expanded uncertainty is calculated to about 1.89 %. In Table 1, the *r* values for the correlation between the various flow meters are shown. Note that these values are not actively used in the calculations, but are calculated afterwards from the uncertainty results, using a generalised version of Eq. (13).

The calculated relative expanded uncertainty of 1.89 % is outside the requirement from the authorities that in this specific case is 1.5 %. Therefore, it has been looked for corrections to the instrumentation set-up in order to reduce the uncertainty. From Fig. 4, it is seen that orifice plate no. 1 contributes most to the uncertainty for the total source. This is not because of especially large uncertainty for the measured flow rate of that specific orifice plate. Instead it is because the flow through that orifice plate is by far the largest for that source. Therefore, that orifice plate is weighted more than the other orifice plates in the total uncertainty budget.

In Fig. 5, the various uncertainty contributions for the flow measurement using orifice plate 1 are shown. It can be seen there that by far the largest uncertainty contributions are from temperature at the orifice plate. This is because the temperature at the orifice plate is estimated, and not measured. It was therefore recommended to install a temperature measurement upstream this orifice plate. In August 2007, this new temperature measurement was set into operation. The uncertainty analysis was thereafter re-calculated with the reduced uncertainty contribution from the temperature upstream the orifice plate appearing after installation of the temperature measurement. The results from that calculation are shown in Fig. 6. It can be seen that the uncertainty contribution from orifice 1 to the uncertainty of the total flow in the source is significantly reduced compared to Fig. 4. The relative expanded uncertainty for the total flow in source 1 is now well within the requirement of 1.5 %. This illustrates how the uncertainty model and analysis can be used as a documentation of the uncertainty as per today and also as a tool for planning modifications of the instrumentation in order to reduce the uncertainty.

Finally it should be mentioned that it is not only new instrumentation that can change the uncertainty. Significant changes in flow rates, both in total and individually between the orifice plates will also affect the uncertainty results, even when the instrumentation is unchanged. There are several reasons for that, e.g. the following:

- The uncertainty of the differential pressure measurement is flow velocity dependent
- The uncertainty of the expansibility factor is flow velocity dependent
- The weighting of the uncertainty between the different orifice plates is changed when the flow rates are changed.

This means that when there are significant changes in the flow rates in a process plant, the uncertainty should be re-calculated. For Statoil Mongstad, this will be the case when the new energy plant (gas power plant) will be opened.

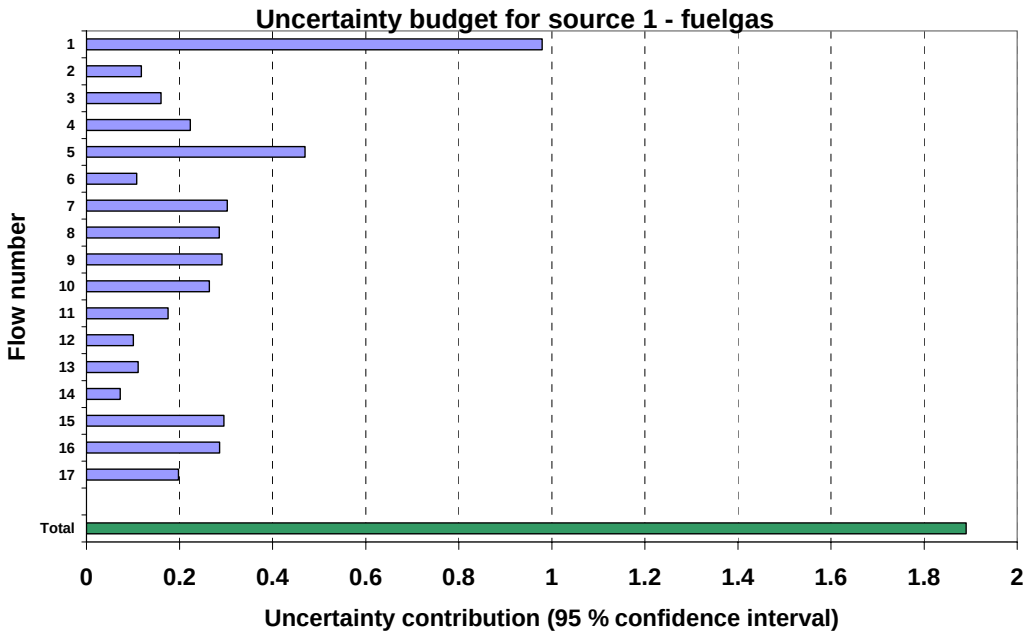

Fig. 4 Uncertainty budget for Source 1, 2006 results

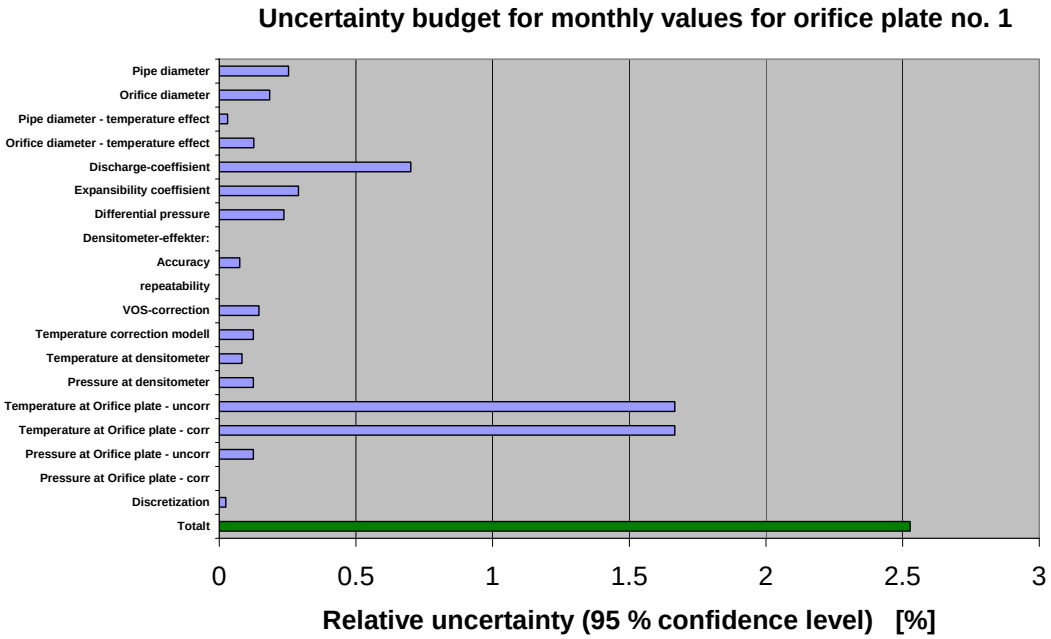

Fig. 5 Uncertainty budget for orifice plate no. 1 in Source 1, 2006 results.

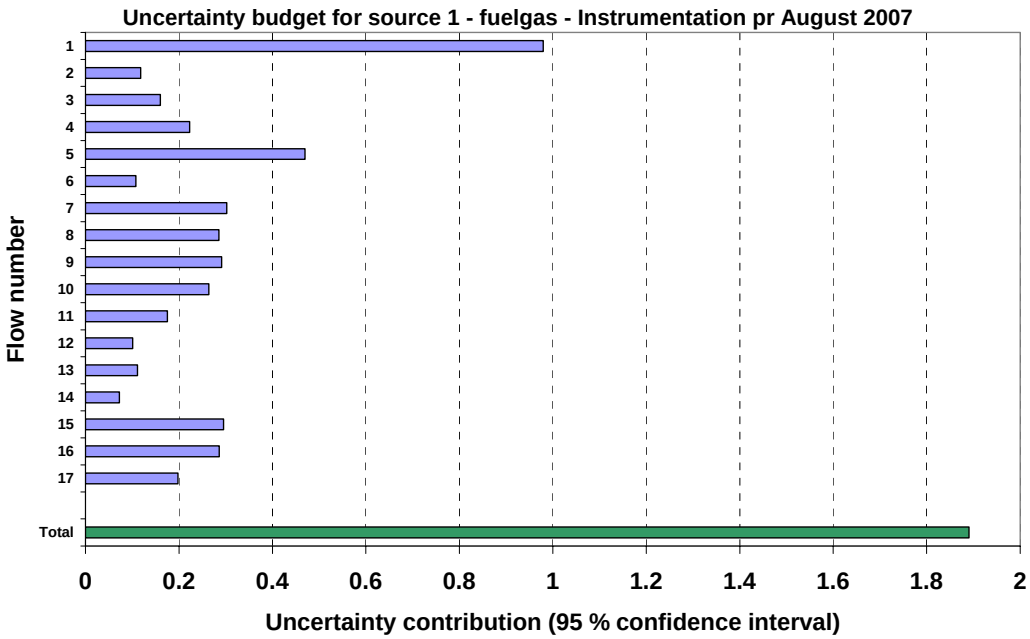

Fig. 6 Uncertainty budget for source 1, 2006 results, but with an extra temperature sensor installed at orifice plate no. 1.

Table 1 r-value implicitly used for the covariance between the uncertainty of the various flow measurements in Source 1.

	1	**2**	**3**	**4**	**5**	**6**	**7**	**8**	**9**	**10**	**11**	**12**	**13**	**14**	**15**	**16**	**17**
1		0.203	0.203	0.203	0.201	0.203	0.202	0.201	0.202	0.202	0.203	0.202	0.000	0.203	0.043	0.042	0.042
2			0.092	0.092	0.091	0.092	0.091	0.091	0.091	0.091	0.092	0.091	0.000	0.092	0.019	0.019	0.019
3				0.092	0.091	0.092	0.091	0.091	0.091	0.091	0.092	0.091	0.000	0.092	0.019	0.019	0.019
4					0.091	0.092	0.091	0.091	0.091	0.091	0.092	0.091	0.000	0.092	0.019	0.019	0.019
5						0.091	0.091	0.090	0.091	0.091	0.091	0.091	0.000	0.091	0.019	0.019	0.019
6							0.091	0.091	0.091	0.091	0.092	0.091	0.000	0.092	0.019	0.019	0.019
7								0.091	0.091	0.091	0.091	0.091	0.000	0.091	0.019	0.019	0.019
8									0.091	0.091	0.091	0.091	0.000	0.091	0.019	0.019	0.019
9										0.091	0.091	0.091	0.000	0.091	0.019	0.019	0.019
10											0.091	0.091	0.000	0.091	0.019	0.019	0.019
11												0.091	0.000	0.092	0.019	0.019	0.019
12													0.000	0.091	0.019	0.019	0.019
13														0.000	0.000	0.000	0.000
14															0.019	0.019	0.019
15																0.004	0.004
16																	0.004
17																	

5. CARBON FACTOR

The carbon factor is a factor that specifies the quantity of CO_2 that is obtained from burning a specified quantity of fuel gas. It can e.g. be given in kg CO_2 pr kg fuel gas. This carbon factor can be calculated from the fuel gas composition.

The carbon factor is determined in several ways depending on the actual situation at the process plant in question. Some examples are:

- Online GC for the fuel gas.
- Online GC for a fuel gas that is close to but not equal to the fuel gas in question.
- Regular sampling and laboratory analysis of the gas composition e.g. on a daily, weekly or monthly basis.
- Some few sampling and laboratory analyses for giving an indication of the carbon factor.
- In cases of mixing of various flows of various known gas qualities to a final gas: assumption of the mixing ratios in this mixing.

The uncertainty of the carbon factor depends heavily on the method chosen for determination of the carbon factor. The uncertainty study can thus include issues like the uncertainty of the GC-analysis, uncertainty due to GC measurements on a slightly different gas type, uncertainty due to sampling procedures, sampling period and laboratory analysis, and uncertainty due to unknown mixing. In the present work, details will not be given on procedures and uncertainty estimations for a specific installation.

6. SUMMARY AND CONCLUSIONS

In the present paper, a project regarding documentation of the uncertainty of the CO_2 emissions from the Statoil Mongstad oil refinery has been presented. The national and European regulations for this uncertainty reporting have been briefly described. Uncertainty limits have there been set for activity data (accumulated fuel gas mass) and carbon factor (number of kg CO_2 produced from the burning of one kg fuel gas). In this work, uncertainty of the activity data has been the main focus.

After description of the instrumentation at Statoil Mongstad, a simplified uncertainty model including the correlation between various measurements has been presented. Here, two approaches for treatment of correlation have been presented: the covariance method and the decomposition method.

The decomposition method has thereafter been used on uncertainty calculation for a specific source including 16 orifice meters and one estimation point, at Statoil Mongstad. It is shown that the uncertainty can be improved by suggesting new instrumentation based on the uncertainty budgets worked out in the present work. Based on these results, a new temperature measurement has been installed and is now in operation.

Finally, some considerations regarding the uncertainty of the carbon factor are given.

REFERENCES

Dahl, E. O, Frøysa, K.-E. and Lunde, P.: "Handbook of uncertainty calculations. Fiscal Orifice Gas and Turbine Oil Metering Stations," Issued by Norwegian Society of Oil and Gas Measurement, Norwegian Petroleum Directorate, Norwegian Society of Chartered Engineers and Christian Michelsen Research AS, Norway (free download available from www.nfogm.no) (March 2003).

Commission decision of 18 July 2007 establishing guidelines for the monitoring and reporting of greenhouse gas emissions pursuant to Directive 2003/87/EC of the European Parliament and of the Council. Document number C(2007) 3416 **(MRG 2007)**.

Forskrift om endring av forskrift av 23. desember 2004 nr 1851 om kvoteplikt og handel med kvoter for utslipp av klimagasser (klimakvoteforskriften). Fastsatt av Miljøverndepartementet 14. september 2007 (**SFT 2007**).

Frøysa, K.-E. and Hallanger, A.:"Usikkerhet til rapportert CO_2-utslipp ved Statoil Mongstad" (English: Uncertainty for reported CO_2 emissions at Statoil Mongstad), CMR report no. CMR-06-F10649-RA-01, CMR, Bergen, Norway, February 2007 (Confidential, in Norwegian).

ISO, "Guide to the expression of uncertainty in measurement" (GUM). First edition, 1993, corrected and reprinted 1995. International Organization for Standardization, Geneva, Switzerland (1995).

ISO 5167: "Measurement of fluid flow by means of pressure differential devices inserted in circular cross-section conduits running full – Part 1-4", ISO standard, 2003.

ISO 5168: "Measurement of fluid flow -- Procedures for the evaluation of uncertainties", ISO standard, 2005.

Lunde, P. and Frøysa, K.-E.: "Handbook of uncertainty calculations. Ultrasonic fiscal gas metering stations," Issued by Norwegian Society of Oil and Gas Measurement, Norwegian Petroleum Directorate and Christian Michelsen Research AS, Norway (free download available from www.nfogm.no) (December 2001).