Recent field experiences using multiphase meters for fiscal allocation

Eirik Åbro, StatoilHydro ASA
Kåre Kleppe, StatoilHydro ASA
Leif Jarle Vikshåland, StatoilHydro ASA

Introduction

StatoilHydro has about 150 multiphase and wet gas meters in operations, with additional 70-80 multiphase and wet gas meters to be operative in near future. Most of the meters in operation today are used for production optimisation and production management.

During the last years, several oil/wet gas fields operated by StatoilHydro have been developed by use of multiphase and wet gas meters for fiscal allocation purposes. The fields are developed as subsea productions system (SPS) where unprocessed multiphase flows are transported to process platforms through pipelines.

In this paper the allocation metering installed on Kristin and Åsgard B in connection with the tie-in of the Tyrihans Field is presented. The ownership allocation between the Halten West Unit (Kristin) and Tyrihans Unit is based on multiphase metering of the Tyrihans flow line production, i.e two parallel topside multiphase meters installed onboard Kristin platform. Subsea multiphase meters are installed for the 11 subsea producing wells, 8 oil producers initially in 2009, one gas producer in 2015 and converting of two gas injectors to gas producers in 2023.

The Tyrihans field started to produce in July 2009 and data from the multiphase meters and the test separator meters have been compared frequently in order to verify the topside multiphase meters. The contributions of the overall fiscal metering system uncertainties of the allocation metering for the Tyrihans production are identified, such as test separator metering, PVT compositions, gas lift measurements and multiphase meters. Field experiences with results from the multiphase meters used for fiscal allocation of the Tyrihans productions from the first months in operation are presented.

Tyrihans field development

The Tyrihans field is located in PL 073 (block 6407/1) and PL091 (block 6406/3) in the Halten Nordland area. Figure 1 illustrates a prospect map including the location of Tyrihans.

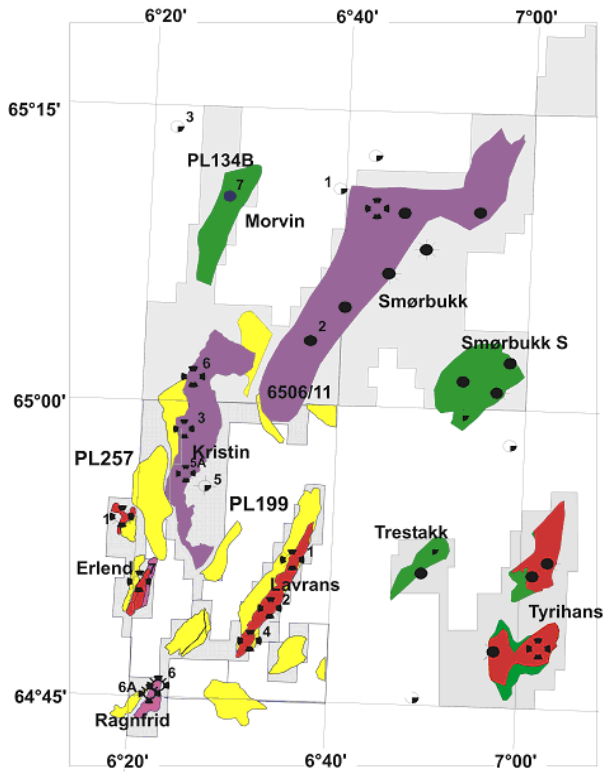

Figure 1. Tyrihans location map at Haltenbanken

The development concept of Tyrihans comprises five separate four slots templates. One production template located on Tyrihans Nord, three on Tyrihans Sør and one injection template in the saddle point between the two accumulations. The hydrocarbon production from Tyrihans is tied in to the Kristin platform. The Tyrihans Sør well stream produces through a 14 km 16” flow line to Tyrihans Nord and commingled production of Tyrihans Sør and Nord through a 29 km 18” flow line to Kristin.

Reservoir pressure support is achieved by utilising both gas- and water injection. Gas injection is provided from Åsgard B. Export gas from Åsgard B is injected into Tyrihans Sør through a 10” flow line. The water injector is a stand-alone subsea raw seawater injector on a separate template placed between Tyrihans Sør and Nord.

Table 1. Ownership interests of Tyrihans field

	Tyrihans Unit (PL073/PL091)
StatoilHydro ASA	58.8351 %
ExxonMobil	11.7549 %
Total	23.180340%
ENI	6.22966 %

*) Pre unit split is used in PL073B (Based on a PL073 (80%) and PL091 (20%) split).

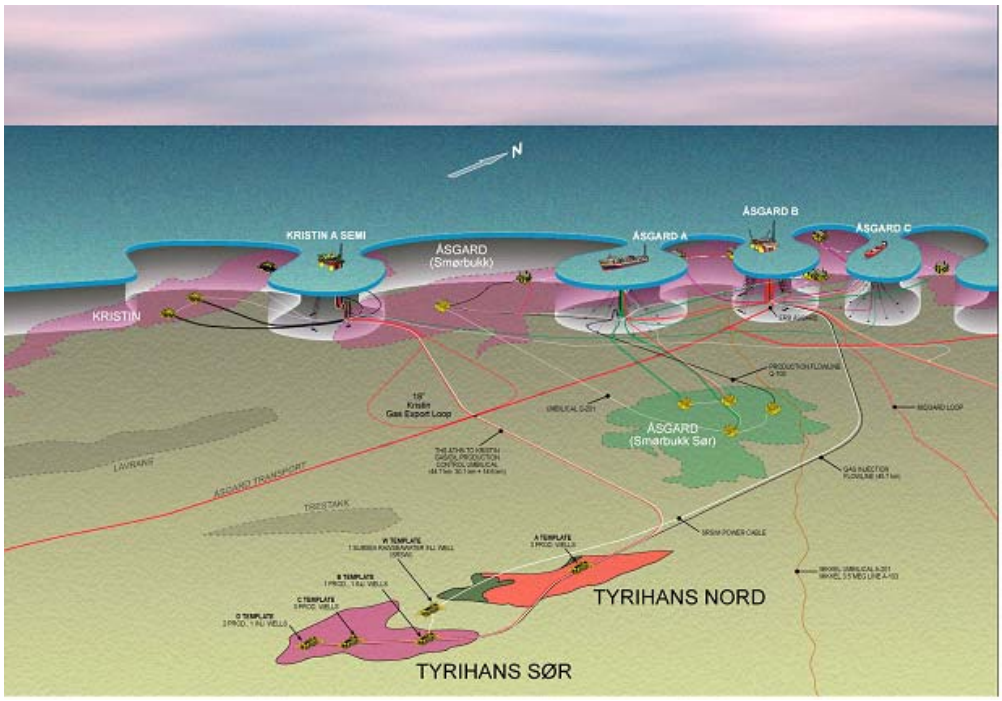

Figure 2. Tyrihans development sketch

Measuring concept and testing philosophy

The topside multiphase meters are used for fiscal allocation purposes. With the test separator onboard Kristin, the topside multiphase meters are verified periodically against the test separator. The first year of production, however, the availability of the test separator is high. When shut-in of new wells, the well production shall be routed to the test separator.

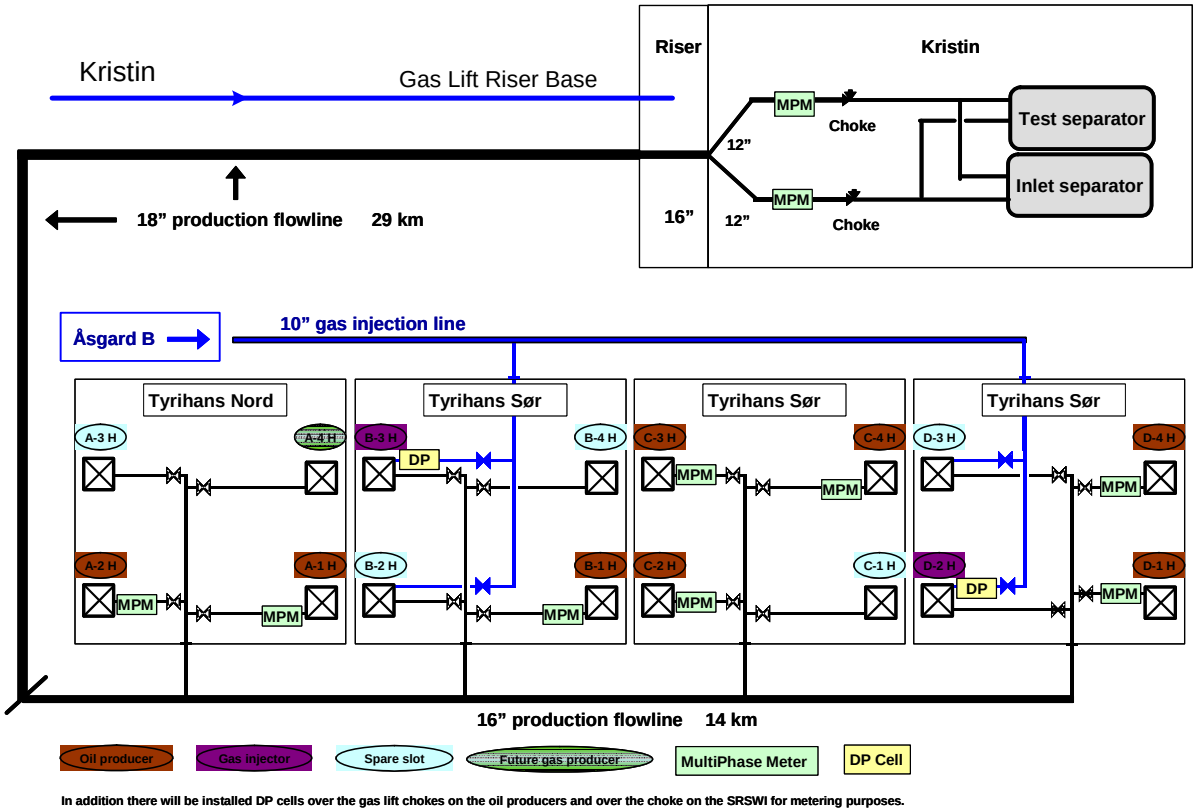

Figure 3. Tyrihans metering concept

Each of the subsea and topside meter have a measurement uncertainty specification. Two different multiphase meter technologies have been chosen for subsea and topside. The topside multiphase meters, however, are equal and both the meters can be routed to the test separator, as indicated in Figure 3.

The subsea multiphase meters, which are used for production optimisation, are also back-up for the topside multiphase meters. While both topside meters are in normal operation, and verified against test separator, the subsea meters are continuously compared to the top side meters. The total hydrocarbon mass rate measured by the topside meters is compared to the sum of the hydrocarbon mass rate measured by the individual subsea multiphase meters and the mass rate from the gas lift. Gas lift in the riser base is accounted for. With continuous gas lift in the wells, updated PVT input to the subsea multiphase meter is required and the amount lift gas must be accounted for. However, for gas lift in the wells during start-ups, it is not possible/practical to update the PVT data in the subsea multiphase meters.

By comparing continuous HC mass and water rates, measured by topside meters and subsea meters, included gas lift in riser base, any deviation between the topside measurements and subsea measurements is revealed. More extensively testing by using the test separator is required in order to map the source of deviation.

With known fluid compositions of Tyrihans Nord and Tyrihans Sør, model-based PVT-input to the topside multiphase meters at Kristin is implemented. Export gas from Åsgård B used as gas lift and gas injection, and export gas from Kristin is used for gas lift in the Tyrihans riser will influence the overall PVT data. Gas lifts in the wells and riser base are planned primarily for start up purposes. Gas lift in the wells may also be used for flow stabilisation when or where this is considered necessary from an operational point of view. The system is designed for continuous use of lift gas, and as a consequence, updated PVT input to the subsea multiphase meters and topside meters are required. Both Åsgard B and Kristin gas lift and injection for Tyrihans are measured and included in the overall measurement philosophy.

Tyrihans 14” riser is connected to a 16” flow line manifold. From the 16” manifold the total Tyrihans stream is split into 2 lines upstream the chokes. On each line there is installed a multiphase meter that is connected to a valve arrangement so that each flow line can be directed either to Kristin test manifold or Kristin production manifold. Each multiphase meter can be directed to Kristin test separator in order to be individually calibrated.

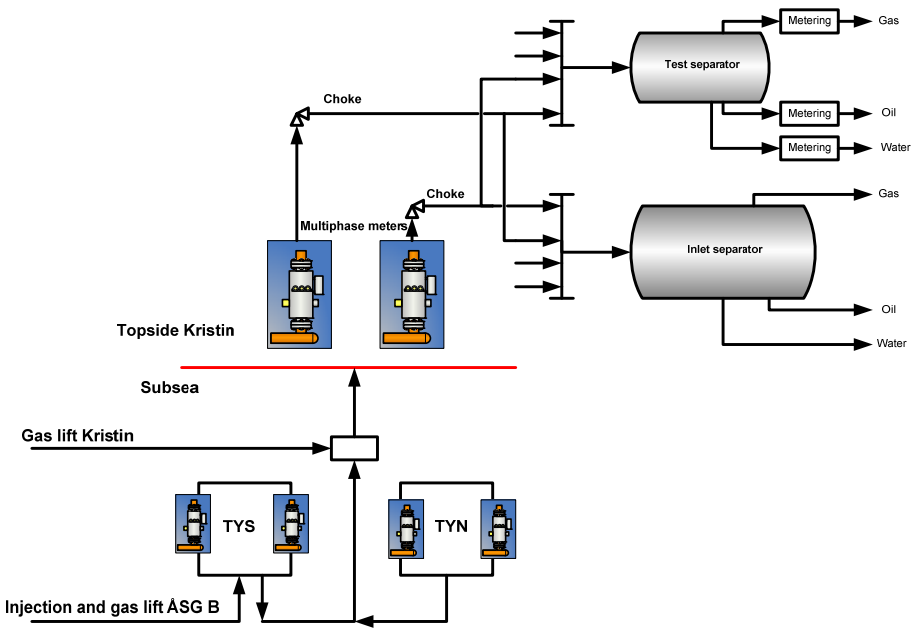

Figure 4. Simplified sketch for Tyrihans inlet arrangement at Kristin

Measurement uncertainties are given for each multiphase meter by the vendors. The specified measurement uncertainties given by the vendors are not based on the specific field application. Additional uncertainties due to PVT related uncertainty and flow dynamics, such as slugging must be accounted for.

Measurement	Uncertainty
Oil metering	
6” 5-path ultrasonic	+/- 0.32% mass[1]
2” 2-path ultrasonic	+/- 1.45% vol[2]
Gas metering	
10” V-cone	+/- 0.7% mass or vol
4” V-cone	
Water metering	
3” 2-path ultrasonic	+/- 1.2% mass or std vol[3]
1” 2-path ultrasonic	+/- 7.2% mass[4]

Table 2. Metering of test separator at Kristin.

Table 2 shows the Kristin test separator metering. For Tyrihans the situation is high flow and high temperature. High temperature will give a slightly higher contribution to the total uncertainty than low temperature. The uncertainty for the test separator oil metering with high flow and high temperature is therefore assumed to be within +/- 0.4 %.

Measurement for gas lift and gas injections are defined by the NPD requirement and in accordance to NORSOK I-104.

Sensitivity of PVT Data input to the topside multiphase meters

For the topside multiphase meters, changes in the PVT data (composition) will change due to the relative production from the Tyrihans Sør and Tyrihans Nord reservoirs. In addition gas lift from Kristin and Åsgård B to riser base and the wells, respectively, contribute to the changes in the fluid composition.

It has been performed a study to map the sensitivity of changes in the PVT data in the topside multiphase meters. The sensitivity study is based on that the PVT data input to the multiphase meters is a mixture of Tyrihans Nord and Tyrihans Sør compositions. The assumption is that the PVT mixture is 20% Tyrihans Nord and 80% Tyrihans Sør during plateau production.

Maximum deviations due to PVT setup will then be when production is only from one reservoir, either Tyrihans Sør or Tyrihans Nord. When the PVT input to the multiphase meter is the 20/80 mixture of Tyrihans Nord and Tyrihans Sør:

---

[1] high flow and low temperature.
[2] low flow and high temperature.
[3] high flow and high temperature.
[4] low flow and low temperature.

- The relative deviations of oil volume rates are 10% and 11% when producing only from the Tyrihans Nord and Tyrihans Sør reservoirs, respectively.
- The relative deviations of gas volume rates are -0.5% when producing only from the Tyrihans Nord or Tyrihans Sør reservoirs.
- The relative deviations of water volume rates are -10 % and 11% when producing only from the Tyrihans Nord and Tyrihans Sør reservoirs, respectively.
- The relative deviations of HC mass are 1.2% and -0.8% when producing only from the Tyrihans Nord and Tyrihans Sør reservoirs, respectively.

Considerable errors in the split between the liquid volume phases are calculated by changes in the PVT in the topside multiphase meters. Therefore, online PVT calculations, based on the relative productions from the Tyrihans Nord and Tyrihans Sør reservoirs, are required. The calculated updated PVT data can be downloaded to the multiphase meters.

Experiences from the start-up of the Tyrihans field

As shown in Figure 5, the calculated accuracies of the topside multiphase meter for hydrocarbon mass rate measurement are about 4-6%, depending on the production profile. Similarly, the calculated accuracies of the measured oil volume rate are about 4-8%.

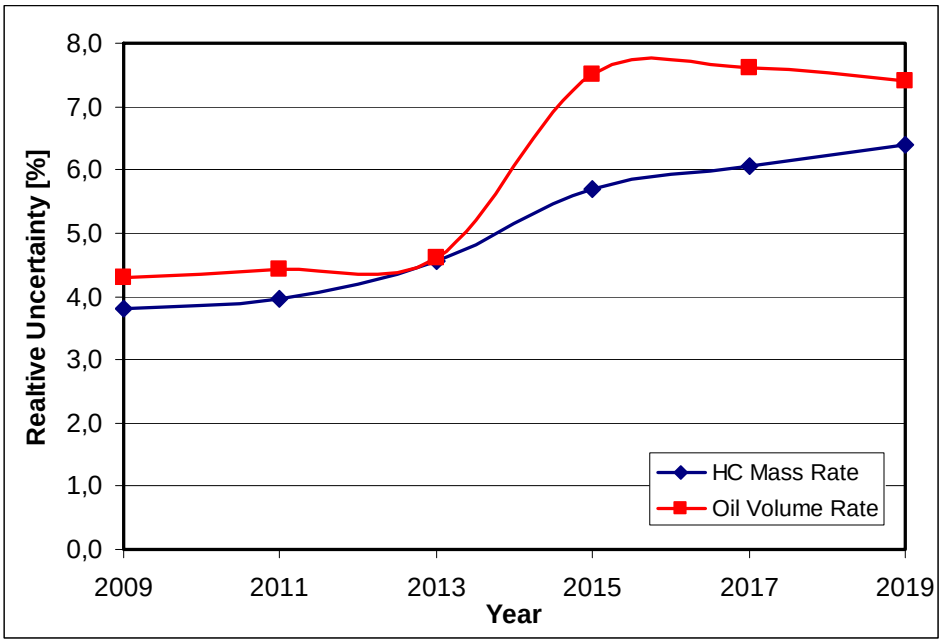

Figure 5. Calculated measurement uncertainty of HC mass rate and oil volume rate for one topside multiphase meter.

To minimize the uncertainties in the allocations, the Tyrihans production allocation is based on HC mass rate, which is independent on different pressures and temperatures subsea, topside multiphase meters and test separator.

The start-up of the first wells was in July 2009. During August 2009 extensive testing was performed on the production and for verifications of the two topside multiphase meters (MPFM1 and MPFM2). The tests have been performed using two different combinations of wells.

For each of the tests, one (f.ex MPFM1) of the two topside multiphase meters was isolated, thus all production was routed through the other multiphase meter (MPFM2) and further to the test separator.

Then the sequence was repeated by isolate the other multiphase meter (MPFM2), thus verification of the multiphase meter (MPFM1) was performed. Figure 6 shows a trend plot of oil, gas and water at actual and standard conditions measured by topside MPFM1.

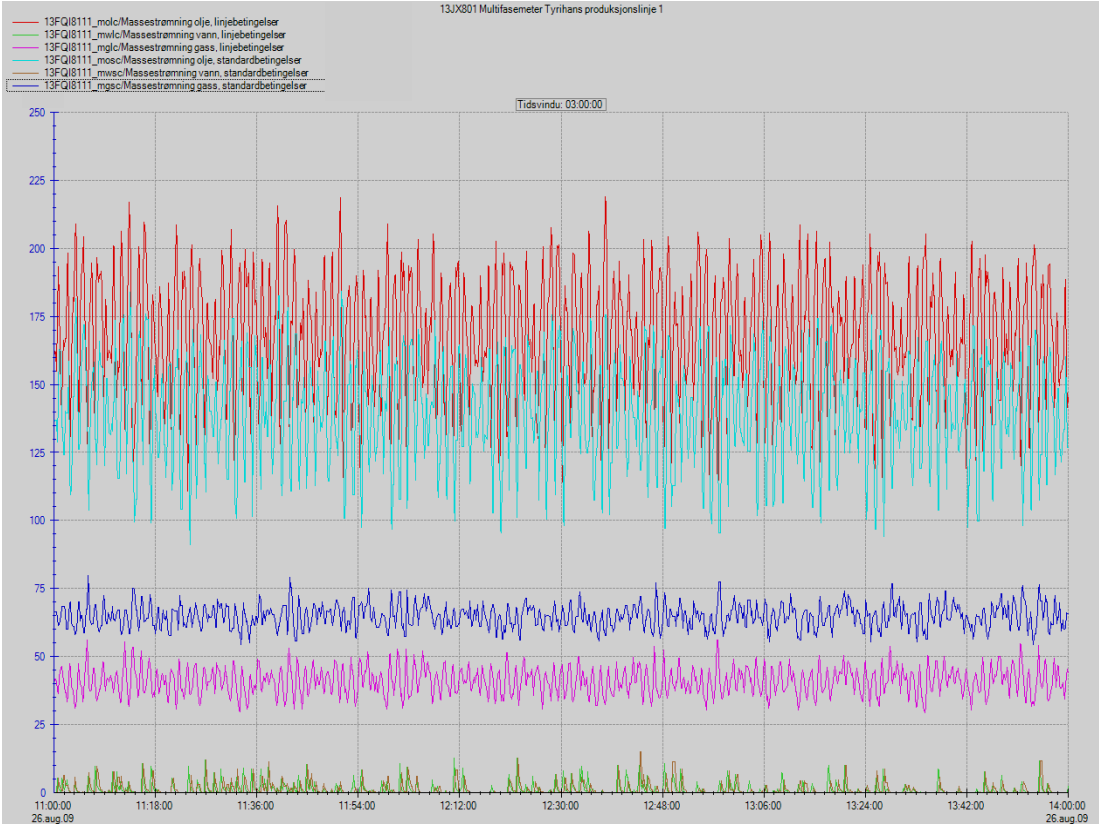

Figure 6. Trend plot of MPFM1 during a test period. Both actual and standard conditions are presented.

When comparing the measurements of multiphase meters and the test separator, the combined uncertainty of the multiphase meter and the test separator must be accounted for. Here, the uncertainty of the test separator is insignificant compared to the overall calculated measurement uncertainties of the multiphase meters, thus it is assumed that any deviation between test separator and multiphase meters can be derived by the multiphase meter measurement uncertainties.

To minimize systematic errors, k-factors are used for standard mass rate for each phase. During, the first months of production it is important to establish k-factors based on several tests, covering several months. For the tests presented here, a new set of k-factors is used for each test date and for each multiphase meter. The k-factors are based on previous calibrations of the multiphase meters. For the k-factors for MPFM1, the k-factors are 0.952 - 0.970 and 1.114 – 1.148 for oil mass and gas mass, respectively. Similarly, for MPFM2 the k-factors are 1.001 – 1.056 and 0.987 – 1.044 for oil mass and gas mass, respectively. The k-factors for water are 1.000 for both meters.

The comparisons for each multiphase meter are done for oil and gas volume flow rates at standard conditions and hydrocarbon mass flow rates. Relative deviations are presented for standard oil volume rates, standard gas volume rates and hydrocarbon mass rates. Due to the low water production, water cut is used to compare the water measurements.

The test periods last over several hours, and each test point represents one hour test under stable condition. By dividing each test into several test points, the repeatability of the tests is also demonstrated. Each test point therefore represents an averaged value over one hour.

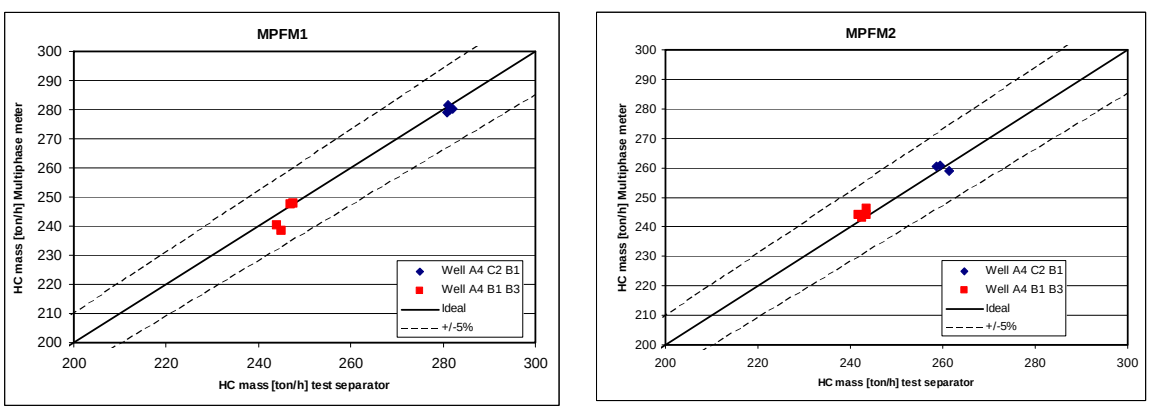

Figure 7. Comparison of hydrocarbon mass rate and with +/- 5% dashed lines.

Figure 7 shows the hydrocarbon mass flow rates measured by both multiphase meters compared to the test separator measurements. Except for the tests done 2. Aug, the repeatability of the hydrocarbon mass rate is within +/-1%, as shown in Figure 8.

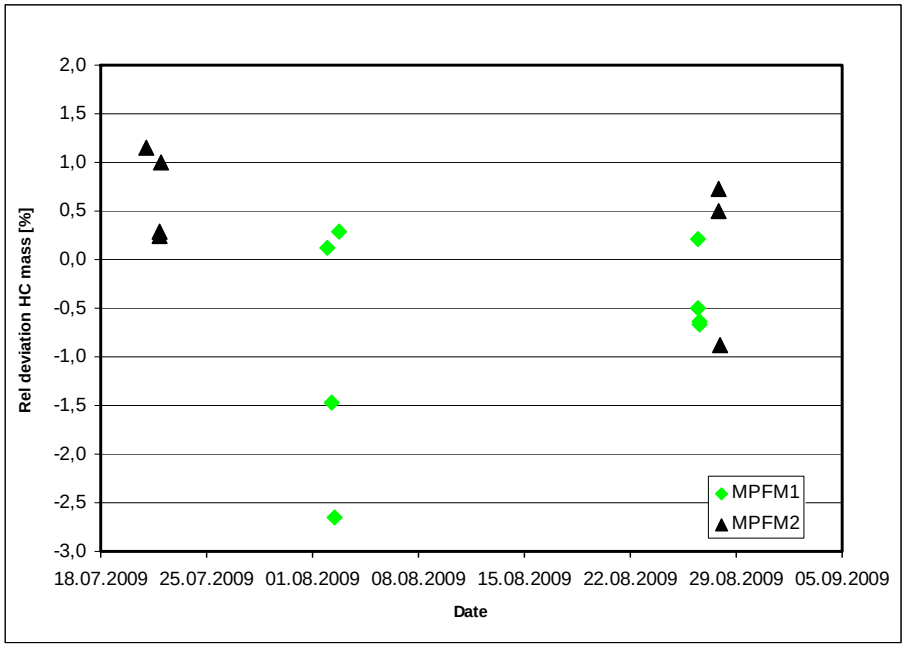

Figure 8. Relative deviation of hydrocarbon mass rate versus time for both topside meters.

Figure 9 and Figure 10 show the comparison of the measured oil volume flow rates at standard conditions and the relative deviations of the oil volume rates. The plots show that the deviations are within measurement uncertainty specification. However, a negative offset of about 1% of the oil volume rates is observed, thus an updated k-factor may be needed. The repeatability of the oil volume rates appears to be similar to the hydrocarbon mass rates, i.e. +/-1%.

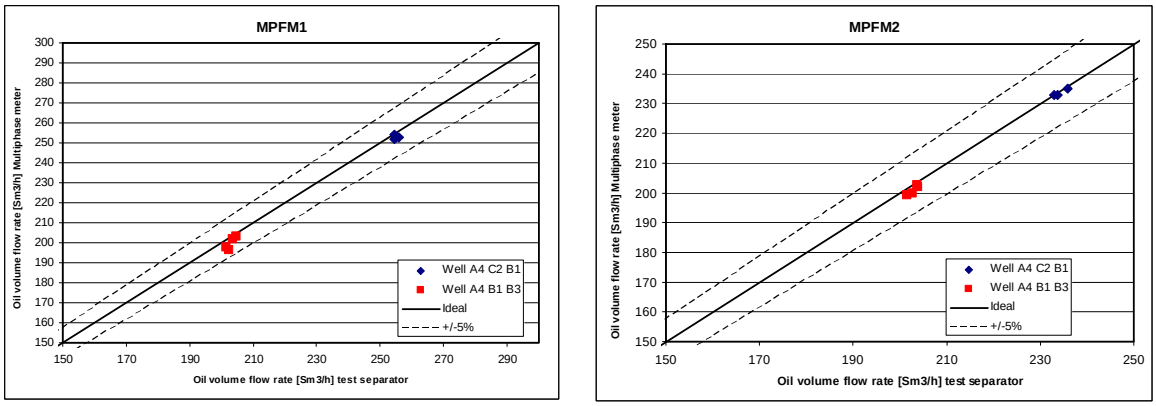

Figure 9. Comparison of oil volume flow rate at standard conditions and with +/- 5% dashed lines.

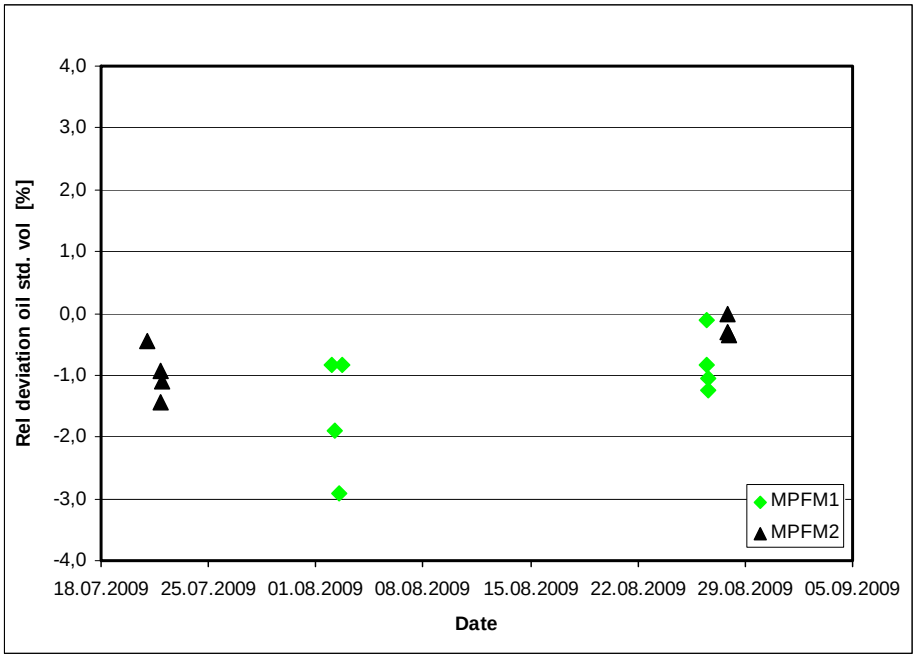

Figure 10. Relative deviation of oil volume flow rate at standard condition versus time for both topside meters.

In Figure 11 and Figure 12 show the comparison of the measured gas volume flow rates at standard conditions and the relative deviations of the gas volume rates. The plots show that the deviations are within +/-3%. However, the repeatability of the gas volume rates appears to be about 4%, and poorer than hydro carbon mass rate, as expected.

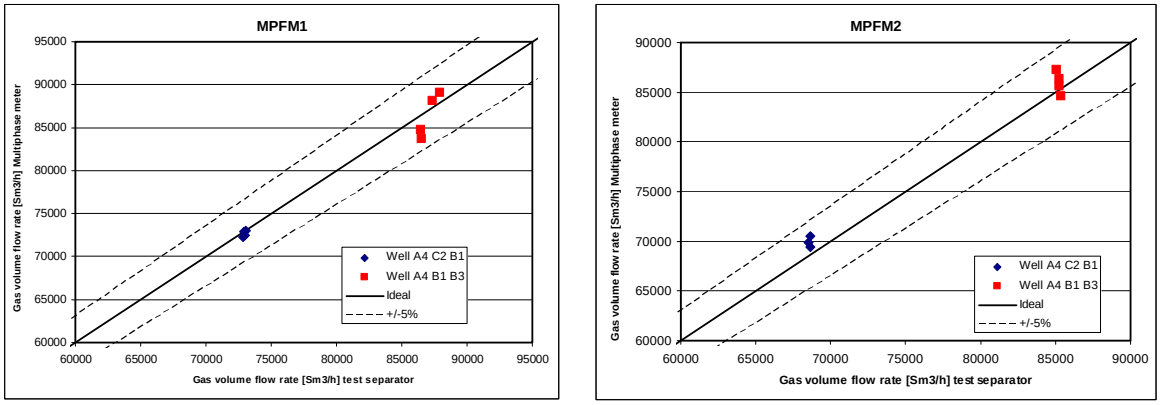

Figure 11. Comparison of gas volume flow rate at standard conditions and with +/-5% dashed lines.

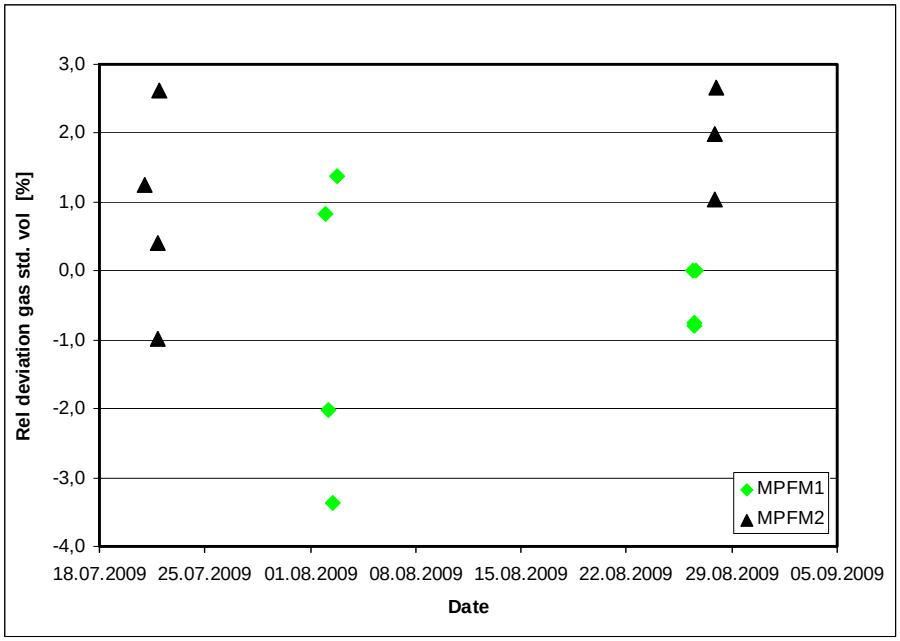

Figure 12. Relative deviation of gas volume flow rate at standard condition versus time for both topside meters.

A 24 hour test was carried out 2. Aug. As seen in Figure 6, it is observed a significant spread of the gas volume rate measurements. If the gas volume rates are averaged over the whole 24 hrs period, the relative deviation of the gas volume rate is reduced to -1.1%.

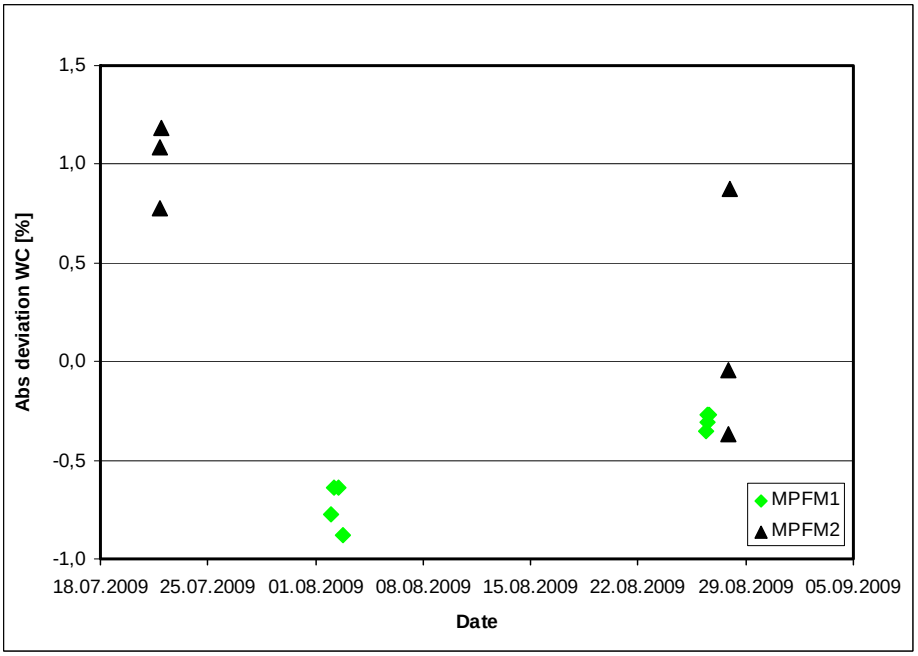

Figure 13. Absolute deviation of water cut versus time for both topside meters.

Conclusions

By evaluating the deviations between the multiphase meters and the test separator, the k-factors during this period have to be taken into account for a complete mapping of the uncertainties.

The ranges of the k-factors in addition to the observed deviation, show that by using multiphase meters topside at the Kristin platform for Tyrihans allocation purposes are within our expectations.

The repeatabilities of hydrocarbon mass rates are within +/-1% for both topside meters for about 90% of the test points.

The comparisons of the single phases show deviations for oil and gas volume rates at standard conditions higher than +/-1%. For oil volume rates the deviations are in the range -3% -0%, indicating an offset of about -1%. For gas volume rates the deviations are about +/-3%. A test period of 1 hour appears to be too low, and reduced deviation of the gas volume rate can be achieved by increasing the testing time.

The results show that the tests of the topside multiphase meters for Tyrihans are within the measurement specifications.

The multiphase meter's sensitivity of the PVT data is high, which can result in significant measurement errors. Carefully follow-ups are needed to maintain these results with high focus on PVT data needed as input to the meters.