North Sea Flow Measurement Workshop
22-24 October 2018

Technical Paper

Metering Skid Life-Extension Challenges Njord Field Rejuvenation

Christine Kristoffersen, Equinor ASA
Jørn Heibø, Process Control AS
Mohammad Hajiarab, Equinor ASA

1 INTRODUCTION

Njord field is located in the Norwegian Continental Shelf and it was in production from 1997 to 2016. The Njord Licence consists of DEA Norge AS, Equinor Energy AS, Neptune Energy Norge AS, Faroe Petroleum Norge AS and VNG Norge AS.

The field was developed with Njord Alpha as the Floating Production Unit (FPU) and Njord Bravo as the Floating Storage Unit (FSU). The FPU is an integrated floating steel platform with drilling and processing facilities as well as living quarters. The stabilised crude oil is transferred from FPU to FSU and exported to market via shuttle tanker from Njord Bravo FSU.

Refurbishment and life extension of the existing Njord facilities is selected as the most cost-effective solution for continuation of production from Njord field from 2020 to 2040. In this regard, design life of the Njord Bravo FSU including the onboard Fiscal Metering Skid is required to be extended for additional 20 years from the original design life.

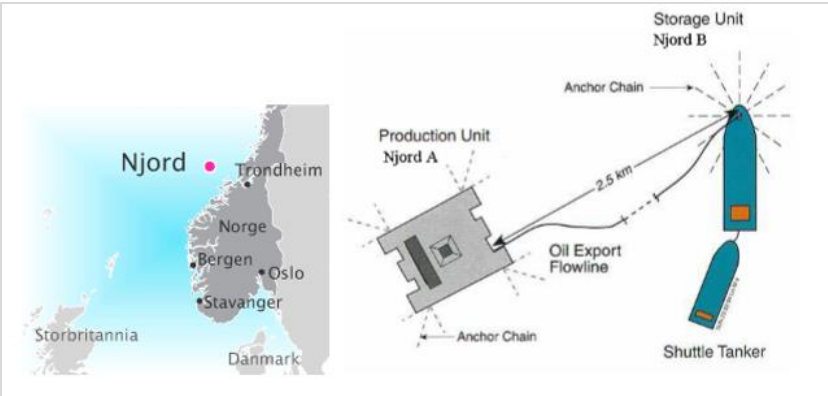

Fig. 1 - Njord Field Location and Layout

Since there are not many reference cases for a complete life extension of an existing fiscal metering unit, this paper summarises considerations that had to be made for life extension of the Njord Bravo Fiscal Metering Skid from original design life of 20 years to the required total design life of 40 years.

This includes challenges with inspection of the existing unit, scoping the refurbishment work, identifying right skill sets within contractors to execute the work as well as impact of Norwegian fiscal regulatory requirement changes from late 90's to 2018.

Challenging decisions had to be made to find the balance between refurbishing the existing unit to the latest cost-effective technology while achieving an optimised solution that could continue to be efficient in the next 20 years.

The refurbishment activity is ongoing at the time of this paper with first oil being targeted in 2020.

2 Background

The existing Njord Bravo Metering Skid was designed, constructed and installed onboard Njord Bravo FSU in the late 90's and it was in operation for almost 20 years.

Several metering options were considered for the Njord life extension project, including a new built metering skid, reuse of a newer built metering skid as well as refurbishment of the existing metering skid.

As part of preparations and considerations for decision basis, a preliminary in-situ refurbishment scoping was performed on the metering skid while the vessel was on quayside in Kristiansund.

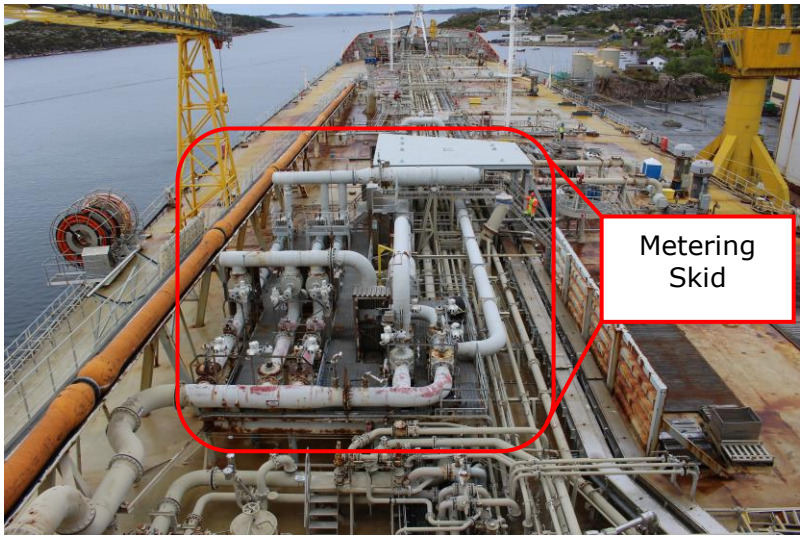

Fig. 2 – Original Metering Skid Onboard Njord Bravo FSU in Kristiansund

The preliminary scoping included:

- Thorough investigation of physical state of the metering skid
- Review of original design documentation and available design margins
- Assessment of existing layout and metering principals for further 20 years life extension
- Evaluation of functionality of the existing metering system with respect to new fluid characteristics vs. original design operation range

Following the preliminary assessments, noting available design margins and after putting in place mitigation measures for risk of "unknown-unknowns", refurbishment and life extension of the existing metering skid was selected as the base case fiscal metering solution for the Njord field life extension, with an option

to revert to a new built skid after completion of detail inspections following dismantling of the skid.

This was based on the perceived cost savings and positive environmental impact that reuse of the existing metering skid would bring to the overall project. However, this approach introduced further challenges including but not limited to:

- Overall project management of the work
- Scoping of metering skid life extension
- Accommodating future tie-ins within operational limits of the existing equipment
- Operational fiscal upgrade requirements
- Alignment with latest regulatory requirements

These are further discussed in detail in following sections of this paper.

3 Overall Metering Skid Life Extension Management

In order to simplify the metering skid life extension strategy, the overall scope of work was divided into three phases namely:

- Phase I: Dismantling and Scoping
- Phase II: Refurbishment Execution
- Phase III: Re-installation, Completion and Commissioning

Each of these phases introduced different work management challenges to the project.

In all of the phases, the key element in achieving targets for each phase has been the close cooperation between Company and the metering skid refurbishment Contractor. In this regard, an integrated team approach consisting of Company and Contractor representatives, supplemented by a hands-on and quick decision-making attitude has been a catalyst in solving continuous unexpected issues that have raised during the refurbishment.

4 Phase I: Dismantling and scoping

During the first phase, focus was on safe dismantling and removal of the metering skid, piece-by-piece, from the FSU followed by detail assessment of state of each piece. Then each piece was categorised to either be refurbished or discarded and replaced with a new piece.

This required clear categorisation procedure from Company and close engagement with dismantling contractor as well as refurbishment contractor to ensure each piece is not damaged during dismantling, and categorisation is done in a manner that maximises benefits of refurbishment without jeopardising final quality and performance of the refurbished metering skid.

A specialist dismantling sub-contractor was engaged to plan and execute the dismantling scope.

Noting the above, the dismantling and scoping phase consisted of:

- Dismantling Preparation and Planning
- Dismantling Execution
- Detailed Inspection and Categorisation

4.1 Dismantling Preparation and Planning

Noting the age and ownership history of the unit, gathering life cycle information before conducting any physical activity was noted to be a challenging task. Historical information including available "as-built" drawings and documentation as well as operation history of the metering skid including information on life time modifications were gathered as an initial step in the process. This information formed the basis of dismantling preparation and planning.

Before conducting metering skid dismantling, a high-resolution laser scan of the skid was performed to generate a detailed 3D model. The model was then used for dismantling planning as well as assembly and installation later on during hook up.

Availability of such detailed model provided a reference to ensure the refurbished skid is within dimensional tolerances of the original skid and final installation onboard Njord Bravo can be achieved with minimum disturbance to the original hook-up points on the vessel.

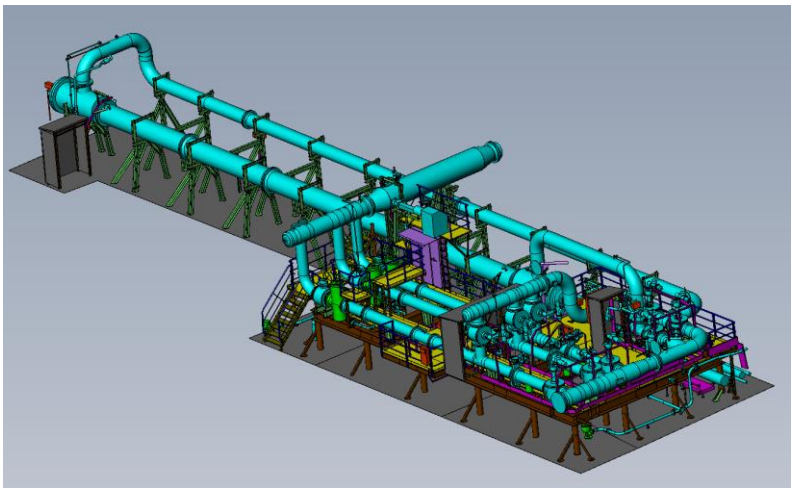

Fig. 3 - Njord Bravo Original Metering Skid 3D model

Dismantling Sequencing was also a critical matter that needed to be considered as part of the dismantling planning.

Since the metering skid was required to be removed piece-by-piece due to onboard crane capacity limitation, a detailed dismantling sequence was prepared to ensure removal of each piece is carefully planned and no damage is induced to each piece during dismantling. Further, each piece had to be tracked closely through storage, categorisation and refurbishment stages.

In order to achieve this goal, main pipe and valve pieces within the metering skid were assigned with an individual tag. Internal tagging of metering skid pipe sections is illustrated in Fig. 4 below.

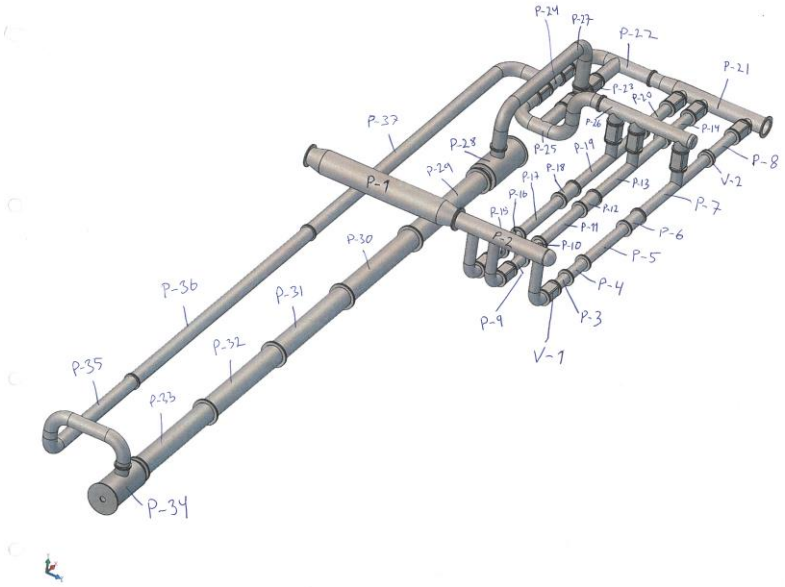

Fig. 4 – Internal Tagging of Original Metering Skid Pipe Sections

Following internal tagging of the metering skid, a step by step dismantling sequence was devised, See Fig. 5.

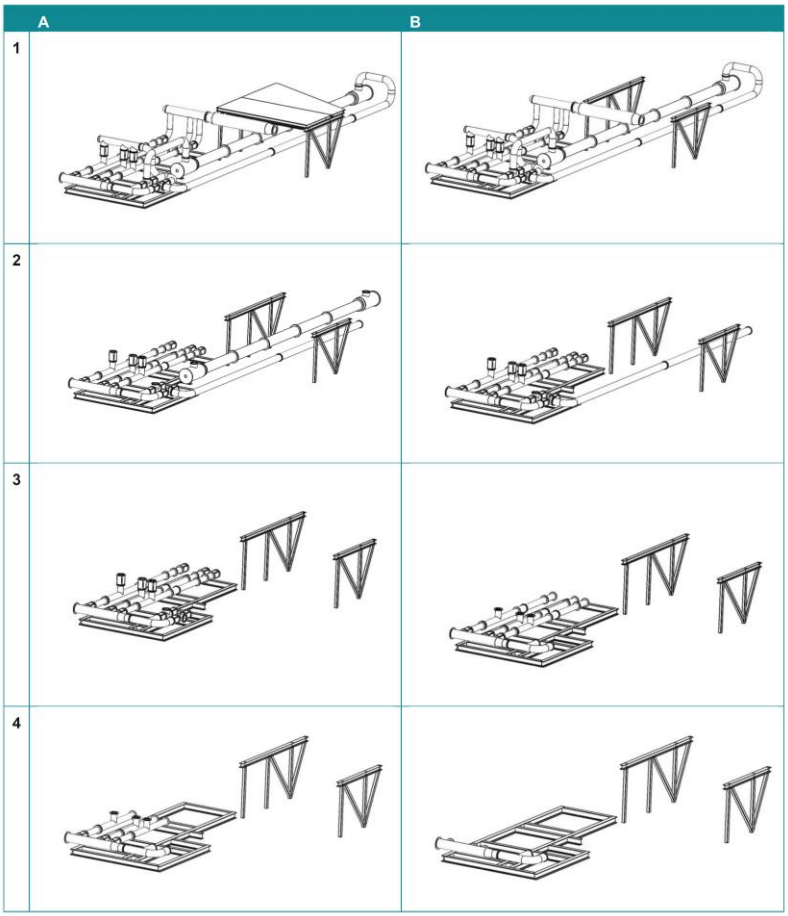

Fig. 5 – Metering Skid Dismantling Sequence

4.2 Dismantling Execution

Dismantling execution was conducted following a detailed dismantling preparation and planning. The onboard offshore crane was recertified and used for piece-by-piece removal of the metering skid components from Njord Bravo to the quayside.

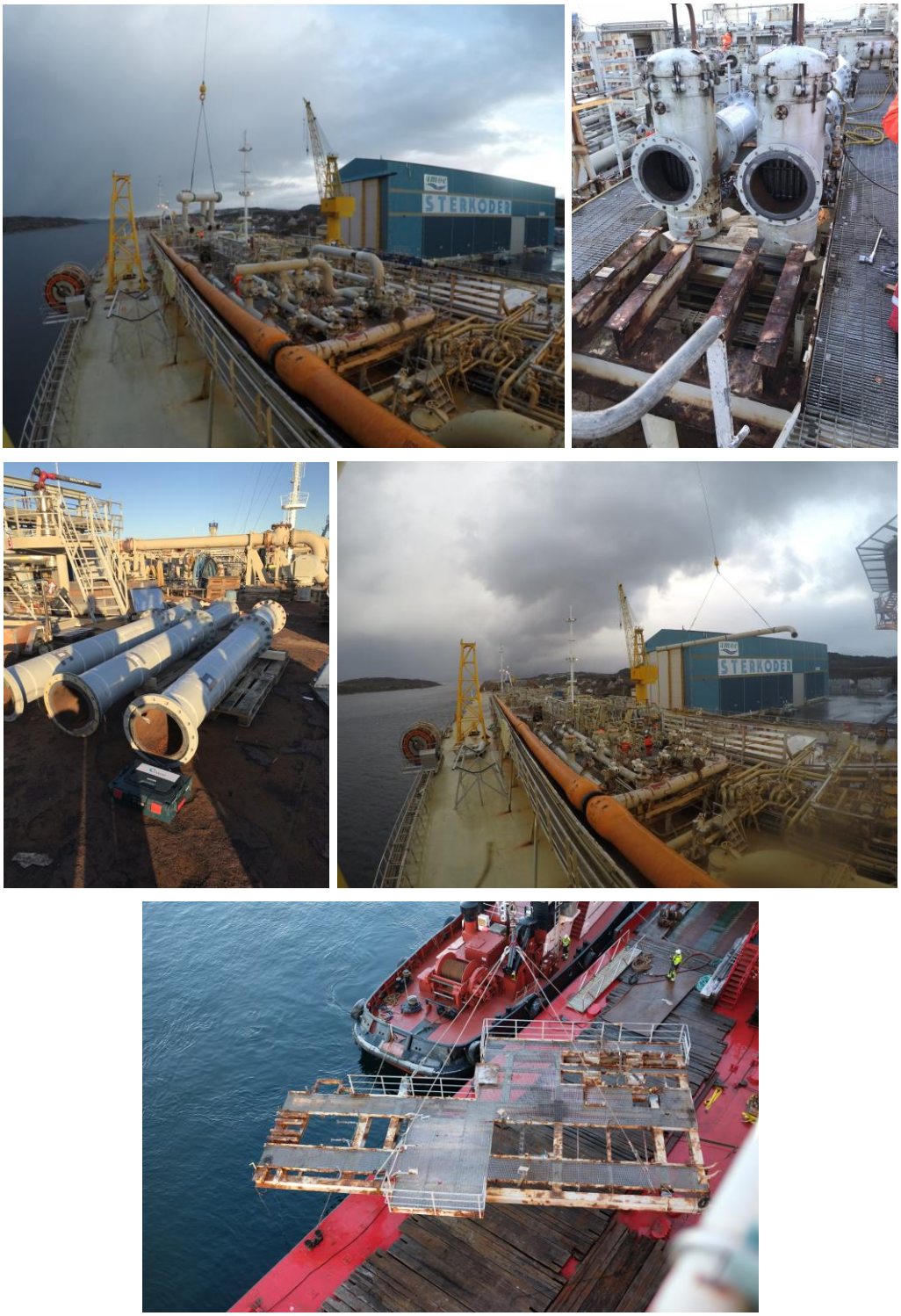

Fig. 6: Piece-by-Piece Dismantling of the Metering Skid

The pieces were then transported to an enclosed storage for further Non-Destructive Examination.

Since the metering skid consisted of several mechanical, electrical and instrumentation pieces in various sizes with different handling and preservation requirements, careful tracking of the pieces was one of the logistical challenges in this stage. The focus at this time was to ensure each piece is handled in such way to ensure reuse of it as part of the refurbishment or to enable use of the piece as a template for fabrication of a replacement piece.

Fig. 6 shows snapshots of dismantling execution from removal of pipe sections to final removal of the metering skid structural frame.

4.3 Detailed Inspection and Categorisation

In this stage, a detail inspection of the pieces was conducted to categorise the pieces for refurbishment or discard. The discarded pieces were also kept for use as templates for fabrication or as reference for procurement of replacement pieces.

The main focus in this stage was on the piping inspection however, other elements such as valves, instruments and flange inspections also needed close follow up for quality assurance.

Selection of correct inspection subcontractors with competent personnel and inspection preparations such as flange polishing, proved to have a significant impact on overall inspection quality and further planning during refurbishment execution.

Noting this, having a detailed inspection criterion for each category of equipment ensured that further reinspection during execution phase is eliminated, especially with regards to reuse of flanges. As a result, long lead items were identified well in advance of the assembly phase.

Following this stage, detail inspections confirmed that up to 80% of the existing components of the metering skid can be refurbished and reused. As this stage was the "point of no return" in the project, the detailed inspections confirmed results of the preliminary inspections and provided an invaluable basis for making an educated decision to proceed with the refurbishment. This allowed the project to save on engineering time and cost for a new skid and capitalise on benefits of reusing the existing equipment as much as practically possible.

Further, comparing the inspection results with other newer metering skids demonstrated that the simple and open layout of the existing Njord Bravo metering skid suffered less from corrosion, comparing to later designs where a closed and covered arrangement resulted in extensive corrosion due to concentration and built up of salt and moisture under covered areas.

5 Phase II: Refurbishment execution

Following Phase I, the refurbishment phase included preparation and cleaning of the refurbishment components, reconstruction of new replacement components or procurement of new equipment components, assembly of components, testing of the re-assembled metering skid, update of the life cycle information together with

"as built" documentation and finally, preparation for transportation of the refurbished metering skid to installation yard for integration with the Njord Bravo FSU.

The focus in the second phase of the project was on ensuring timely execution of refurbishment activities by sub-contractors as well as production or procurement of new pieces. In this regard, making timely decisions on issues that were not identified in the first phase i.e. "Unknown-unknowns", were of importance to meet the delivery milestone for this phase.

Each refurbishment piece was disintegrated by the main refurbishment contractor for further investigation. This allowed the Company and Main Contractor to make case by case educated decisions on extent of refurbishment of each piece. The scope of refurbishment of each piece was then assigned to pre-selected sub-contractors for execution.

Although this hands-on approach resulted in micro-management of the work by the main refurbishment contractor, it ensured full control over refurbishment execution details.

Combined with close follow up and quick decision making from Company and use of local vendors, significant cost savings were achieved in comparison to similar new built metering skid projects, while ensuring high quality control is maintained within the refurbishment project.

The metering skid refurbishment execution can be divided to the following activities:

- Life Extension Scoping
- Refurbishment Engineering
- Regulatory Alignment
- Operational Upgrades
- Challenge of New Fields Tie-In
- Assembly and Factory Acceptance Test

5.1 Life Extension Scoping

As part of the initial considerations, and to outline state of the skid, the original metering skid vendor was contracted to conduct a visual inspection on the metering skid while it was onboard Njord Bravo FSU.

The resultant inspection report formed the basis for scoping of the required refurbishment work. However, issues such as lack of original design documentation and inability to perform detailed inspections without dismantling the skid proved to be a challenge in fully defining the scope of work and subsequently estimating the costs associated to the refurbishment.

This uncertainty was subsequently mitigated by budgeting for a new metering skid as the worst-case scenario and focusing on upside of reusing the existing metering components as much as possible, after dismantling and detail inspections.

Noting the above strategy, quality assurance of post dismantling inspections in Phase I was noted to be of great importance as later deviations from initial

categorisation of metering skid pieces would have significant impact on metering skid refurbishment cost and schedule.

5.2 Refurbishment Engineering

Since in principal, the original design and functionality of the metering skid was to be maintained as much as practically possible, majority of the refurbishment detail engineering was conducted as part of the detail inspections outcome post processing in Phase I.

Further to the above, piping stress and fatigue analysis of the metering skid was performed as part of the overall FSU offloading system, See Fig. 7.

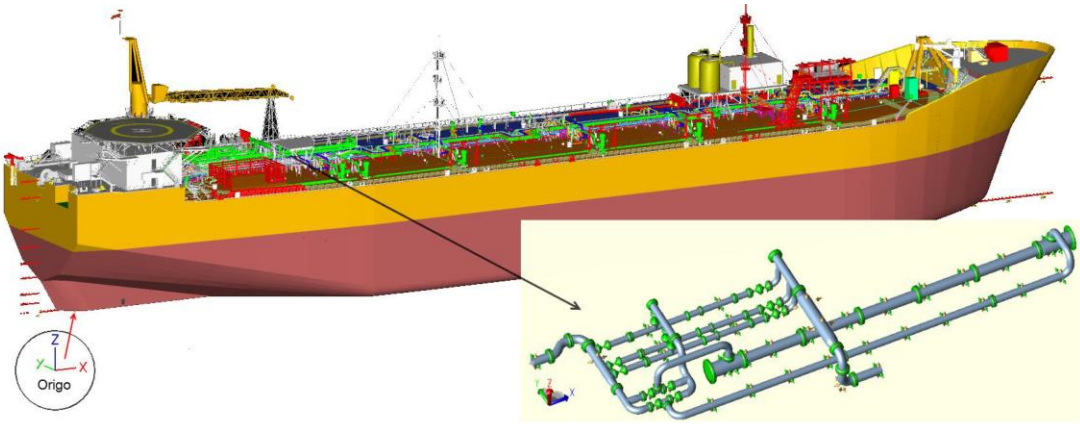

Fig. 7 – Piping Stress Analysis of the Skid as part of FSU Offloading System

The piping stress analysis resulted in design improvements of some of the pipe supports, ensuring lessons learnt from past 20 years of operation are implemented in the refurbished supports, including use of Teflon plates between some of the supports and the main frame and modification of the support locking arrangement to ensure correct behaviour of the support during operation with minimum erosion damage to the frame, See Fig. 8.

Fig. 8 – Optimised Pipe Support with Insert Plate (to be replaced with Teflon)

In line with metering skid piping, the metering skid frame was also subject to strength and fatigue analysis. As a result, sections of the metering skid frame were replaced with new material to ensure the refurbished metering skid frame can withstand the environmental and operational loads during its extended life.

The metering skid refurbishment engineering was also subject to several assurance workshops, including lessons learnt, HAZID, HAZOP, Functional Review, Working Environment and Interface alignments. This was to ensure quality of the metering skid refurbishment meets the same quality level of the FSU refurbishment project.

5.3 Regulatory Alignment

In order to ensure the refurbished metering skid meets expectations of the Norwegian regulatory body i.e. Norwegian Petroleum Directorate (NPD), the authority was kept informed of the refurbishment progress in all stages through regular update meetings.

It was agreed early on in the project that since the original metering skid did not have Measuring Instrument Directive (MID) Certificate and as the project is in principal a like-for-like refurbishment of the original metering skid, then the refurbished metering skid does not need to have a MID certificate.

However, the project endeavoured to meet the latest NPD and NORSOK I-106 requirements as part of the improvements on the refurbished metering skid as much as practically possible, with particular focus on NPD's "Regulations relating to measurement of petroleum for fiscal purposes and for calculation of Co_2 tax (The Measurement Regulations)". Upgrades has been implemented in the refurbished metering skid where cost benefit analysis allowed.

Some of these improvements are further outlined as part of the Operational Upgrades of the skid.

5.4 Operational Upgrades

5.4.1 Double Instrumentation Upgrade

Chapter IV, Section 13 of NPD's Measurement Regulation states that "*The measurement system shall, to the extent possible, be equipped with duplicated instrument functions for signals from primary meters and instrumentation for facilitating condition-based monitoring and reducing the need for preventive maintenance. Signals from parallel metering runs can be used in connection with condition monitoring.*"

Noting the above and in order to have better condition-based monitoring possibility for the refurbished metering skid, duplicated instrumentation was implemented on the skid as part of the refurbishment. As a result, a new revision of the metering software was needed to handle this upgrade. Hence, a completely new metering system computer was developed for the refurbishment.

This upgrade allows for extending maintenance interval from yearly to three-year, resulting in maintenance cost savings during next 20 years of operation.

5.4.2 Grab Sampler Upgrade

Regulatory sampling requirements are outlined in Chapter IV, Section 17 of the NPD's Measurement Regulation. In this regard, extract from comments to section 17 states that "*The filling of sample containers should be monitored and the number of samples should be not less than 10,000 during the sampling period.*"

The original design used a grab sampler with a sampling limitation of taking one sample every 6 seconds. This would allow for just over 5,000 samples during one offloading operation.

To meet the NPD recommendation of taking minimum 10,000 samples from an offloading batch, a new faster grab sampler was installed as part of the metering skid refurbishment work, ensuring compliance with regulatory requirements for the foreseeable future.

5.5 Tie-in of New Fields

New tie-ins from Fenja and Bauge fields to Njord facilities with different oil characteristics to the Njord field oil, introduced a challenge to the metering skid refurbishment.

Noting the original design crude oil viscosity of the metering skid, further heat tracing and insulation was required to accommodate the new crude oil from tie-ins.

A detail process engineering was performed to ensure the existing refurbished metering turbines can be re-used to accommodate the new crude characteristics. Further, all pressure and differential pressure transmitters were installed in heated weather houses.

5.6 Assembly and Factory Acceptance Test

Re-assembly of the metering skid was conducted following refurbishment and reconstruction of the metering skid components, See Fig. 9.

Activities such as alignment of spools with frame, adjustment of pipe supports, bolt tensioning and flange management, introduced their own specific challenges to the re-assembly process.

Fig. 9 – Re-assembly of the Refurbished Metering Skid

However, close tracking of each piece from dismantling to re-assembly as well as use of the original 3D model and skilful re-assembly sub-contractors, proved to be a good investment during re-assembly phase.

Interface alignment with the FSU at this stage ensured that re-assembly is in line with onboard re-installation and any foreseeable re-installation issues are mitigated in advance.

Following completion of re-assembly, the metering skid will go through a Factory Acceptance Test (FAT) to ensure functionality of the skid before being transported to the integration yard for installation onboard Njord Bravo. The test will include flow test of all functionalities of the refurbished metering skid, using pumps to circulate water through the skid from a temporary reservoir.

6 Phase III: Re-installation and Mechanical Completion

Finally, the last phase consists of transportation of the metering skid to integration location, yard installation including hook up of systems, mechanical completion and commissioning of the metering skid onboard Njord Bravo FSU.

This phase of the project is planned to be conducted in first quarter 2019 and it is expected to introduce its own challenges with regards to timely delivery of the refurbished skid, interface alignments onboard the FSU, especially with the existing piping and integration with the new Safety and Automation System (SAS), Mechanical Completion and final Commissioning offshore in 2020.

Noting the above, installation preparations, including interface alignments and installation procedure preparations are ongoing to ensure smooth integration of the metering skid into the Njord Bravo FSU.

7 Summary and Conclusions

Although refurbishment and life extension of an existing metering can provide considerable cost and environmental benefits to an overall project, management complexity and follow up requirements of such activity shall not be under estimated.

In any case, a metering skid refurbishment is not as easy as it may be perceived and requires close follow up and intimate interaction between all stake holders to ensure cost savings are realised without jeopardising quality and functionality of the system.

Detail preparations including data gathering, laser scanning and experience transfer session with operation technicians whom had hands-on experience in operating the skid is critical in successful final delivery of such project.

Holding on to each and every piece until end of the project is also critical, as retention of a piece that seems to have no value in the beginning may prove to be highly valuable during reconstruction as a template or even to demonstrate how the original design was intended to be.

In this particular case, up to 80% of the original metering skid components were reused as part of the refurbishment campaign. This was mainly due to the fact that the original metering skid was over designed and there was a close follow up in all stages of the project to ensure original components can be used as much as practically possible. In general, this approach mitigated the risk of “Unknown-unknowns” in the project to a large extent.

Also, no significant change is noted in scope of refurbishment during course of refurbishment execution. This is mainly attributed to detail and thorough inspections after dismantling of the skid, which proved to be crucial in providing the basis for making the decision to proceed with the refurbishment, instead of opting for a new built skid in the first place.

Finally, use of experienced refurbishment sub-contractors, especially for flange surface assessment as well as detail inspection and categorisation procedure for various components within metering skid ensured limited re-inspections during refurbishment execution. Further, this allowed long lead items to be identified and ordered well in advance of re-assembly.

Noting re-assembly of the refurbished metering skid is ongoing at time of this paper, authors endeavour to capture lessons learnt form assembly, FAT, installation and Commissioning of the Njord Bravo FSU metering skid in a follow-on paper.

8 Acknowledgements

Authors would like to express their gratitude to Njord licence partners, namely DEA Norge AS, Equinor Energy AS, Neptune Energy Norge AS, Faroe Petroleum Norge AS, VNG Norge AS and in particular Equinor's Njord Future Project Management, especially Mr. Kristian Kudsk Andreasen (Njord Bravo E&P Manager) for their support of this paper, as well as Process Control's Project Management and in particular Mr. Tommy Skoge (Project Engineer) for his contribution to this paper.