North Sea FLOW Measurement Workshop

A field comparison of a fiscal USM gas metering station with a conventional orifice station

by

Steinar Fosse, Norwegian Petroleum Directorate
Martin Lillo, Equinor

Where we are in the world

North Sea FLOW Measurement Workshop

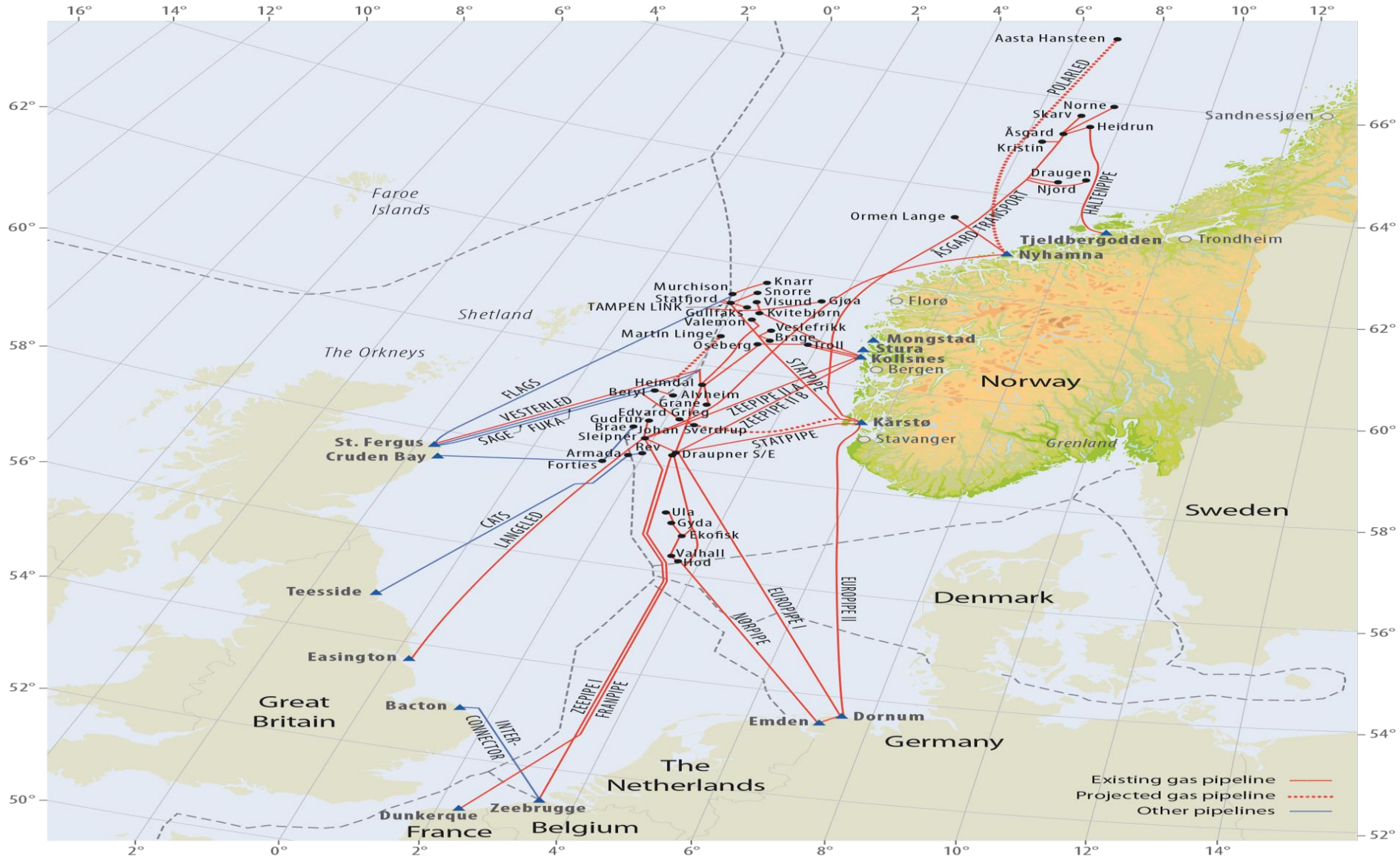

Historic overview

- It has from day one of the North Sea petroleum activity been cross border activity. It has however always been various political restrictions.
- In 2005, the political ties where loosen when a Frame Agreement for Cross-Boundary Petroleum Co-operation was signed.
- As a consequence also the MoU related to measurement issues was updated in 2006.
- The Statfjord gas delivery into the SEGAL pipeline was a direct consequence and it is some metering aspects related to this which will be dealt with in this presentation. Start up date 12.10.2007.

Lay out of some of the platforms and pipelines in the Tampen area

North Sea FLOW Measurement Workshop

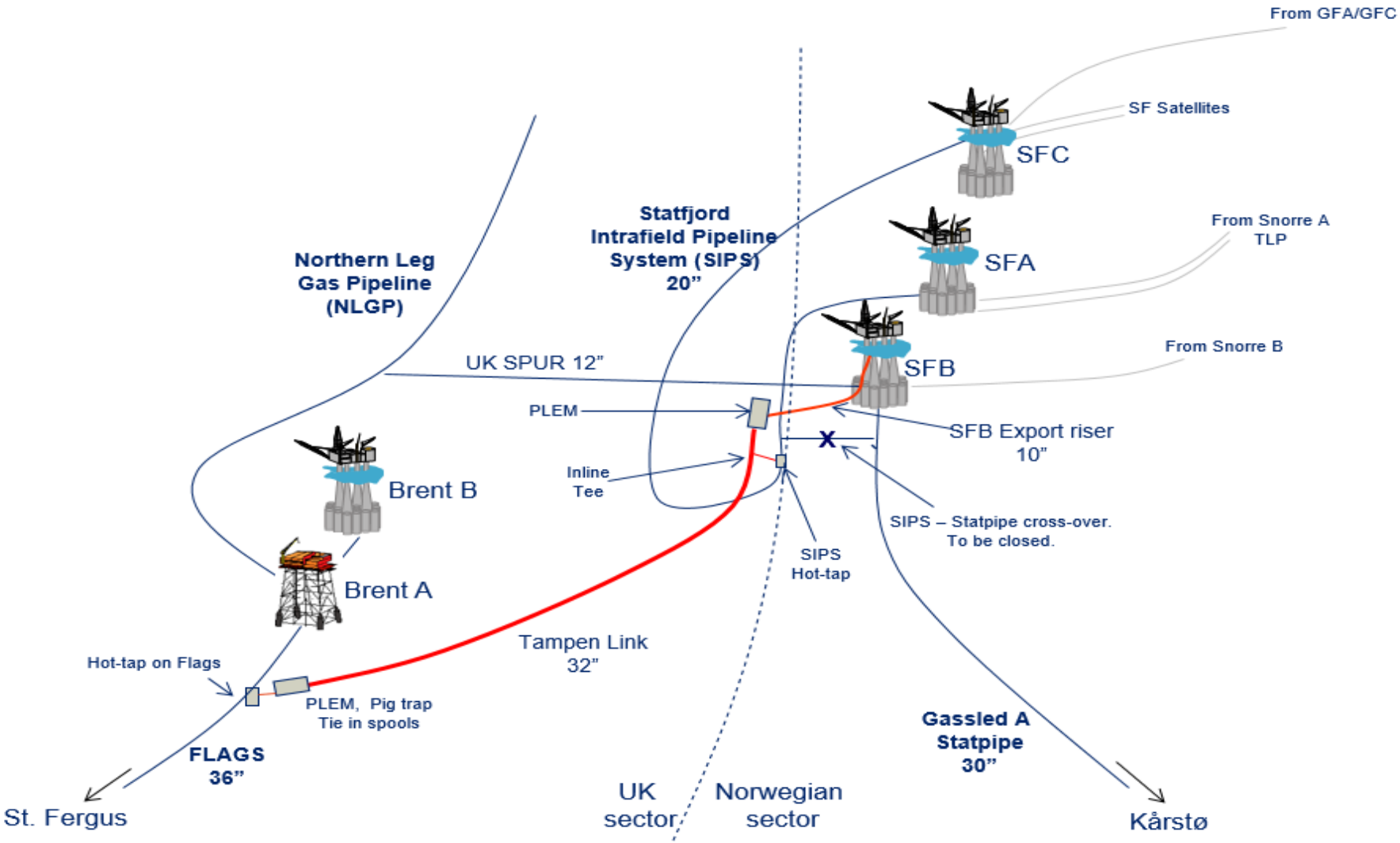

Statfjord gas export

- The Statfjord gas export to both Norway and UK started autumn 1985. The UK offtake was in principle the UK share of the Statfjord gas. The Norwegian gas was exported in Statpipe to Kårstø.
- In 2005 the new Frame Agreement made it possible to also export the Norwegian rich gas directly to UK.
- An agreement was entered into between Shell (SEGAL) and Equinor. Further detail discussions commercial and metering then took place between experts from the companies where also NPD and OGA participated.
- The commercial agreement required laboratory calibration of the new USM meters every 6th month.
- Compact flanges are used. Therefore a platform shut down was needed to bring the USMs out. It is difficult to fulfill.

From platform pipeline schematic we can see that serial test USM/Orifice is possible

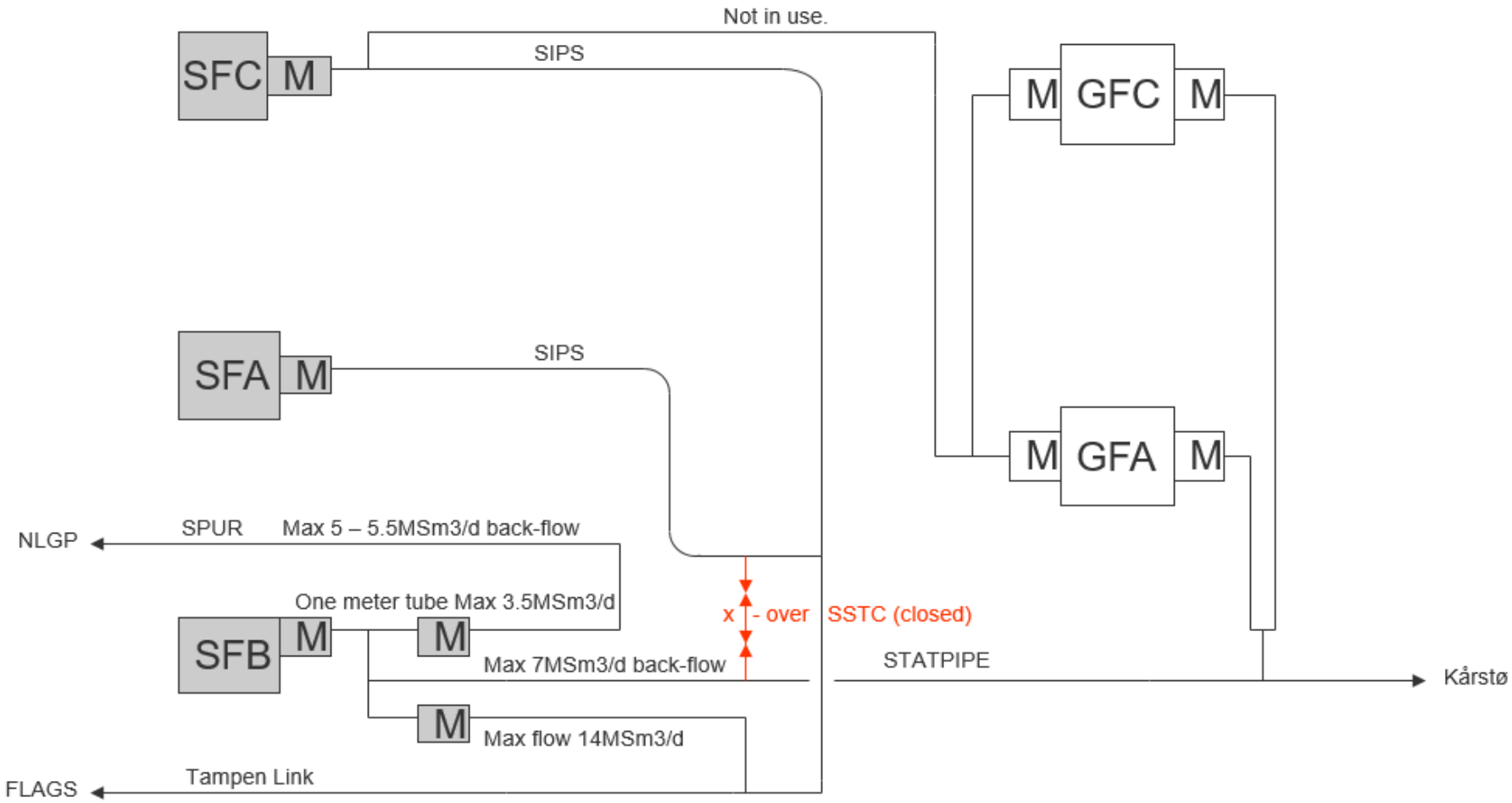

Planning of the serial test

- As a tool to increase the calibration interval the serial test was regarded as a possible way forward. First discussed between NPD and Equinor.
- It was obvious challenges to do such a test on a field in operation. Integrity of valves may always be a challenge.
- Typical test sequence:
- Close UK offtake. Close Statpipe from Stat B.
- Statpipe line 1 test in series with FLAGS line 1.
- Statpipe line 1 test in series with FLAGS line 2.
- Statpipe line 2 test in series with FLAGS line 1.
- Statpipe line 2 test in series with FLAGS line 2.
- Trends are based on accumulated sums. The difference between the two metering stations for the tested period.
- Time, 2 consecutive hours. Mass values.

The difference between the Orifice and the USM station

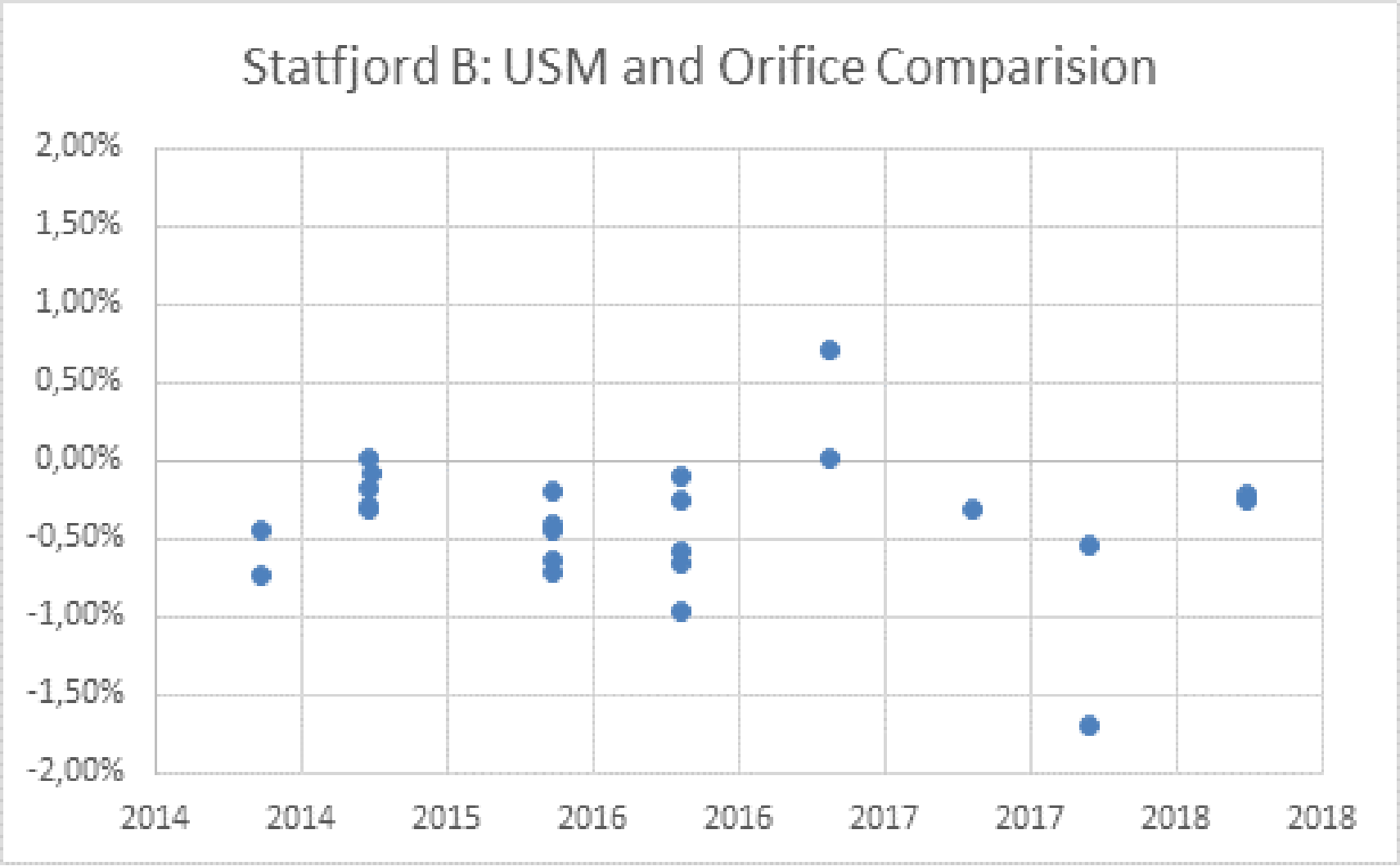

Evaluation

- Both measurement stations are built to relevant standards.
- The Statpipe metering station is a conventional orifice station with 2 paralell 10 inch pipes. Density measurement in each pipe. Equipped with online GC. Upstream straight pipe 30,25 D. Downstream straight pipe 7,25 D. Calc ISO 5167 (1991).
- The FLAGS metering station is a conventional metering station with 2 paralell 10 inch Daniel 4 path Senior Sonic USMs. 2 online GCs for calculation of density. Upstream straight length is 21,1 D and downstream length is 17,9 D.
- The distance between the two stations are 83 m. They are at about the same hight but in different modules.
- As was shown in figure 4, the average bias is 0,4%. But if the 2017 result is filtered out the bias is 0,3%.

The serial check with newly calibrated USMs has always been an aim. It was done in the summer 2018.

Comparison start:	**14.07.2018 08:30**			**Comparison start:**	**14.07.2018 12:00**	
Comparision end:	14.07.2018 11:00			Comparision end:	14.07.2018 14:30	
Discrepancy:	-0,214 %			Discrepancy:	-0,258 %	
Totals:	1477003	1480177			1462536	1466326
	Orifice	USM			Orifice	USM
Timestamp	STP Line1 (ton/h)	Flags Line 1 (ton/h)		Timestamp	STP Line2 (ton/h)	Flags Line 1 (ton/h)

Summary

- The serial test was first discussed between Mr. Fosse, NPD and Mr. Hjorteland, Equinor. The plan was to establish a benchmark test which could be used together with traditional CBM to achieve acceptance for a longer USM calibration interval. As it was possible on Statfjord B without to much work it was regarded as a good idea.
- As the results started to come in 2009 and the discussions thereafter it was may be not such a brilliant idea. But we have learnt a lot and from a metering point of view it has been worth while.
- The figures given in the previous slide was good. The meter had also a very linear calibration curve during the June calibration in FORCE.

Summary

- Impotant issues to check during such a test:
- The flow range has to be defined
- Separate GC and density measurement
- Timing to fully syncronize the test
- All leakage point should be identified and eliminated
- The calculation of density should be equal
- Seal ring on orifice plate should be in proper shape
- All valves involved should have no leaks

- It is quite clear that this is not a laboratory test and therefore you can not expect to achieve and repeat the figures which has been reported in laboratory set ups. But the results shown in figure 4 shows that it might be possible and that the average turn out to be reasonable good.

Summary

- The big challenge which is influencing the results is the flow regime. Both stations are built according to relevant standards, but the header and the upstream pipe work often make things complicated and disturb the flow regime. This without that you are able to exactly quantify it.
- The average deviation in figure 4 is 0,3 (0,4)% in favour of the USM. If we take into account that the ISO 5167 (2003) might have given a 0,18-0,19% lower value for the orifice, then the bias would have increased to 0,5 (0,6)%. The values reported in reference 7 for the same is 0,25%.

Summary

- Be aware: Rich gas (density calculation models based on dry gas) and the duration of the test had a short time interval, 2,5 hours.
- The bias are well inside the combined uncertainty.
- And finally we should not forget that the intention with the whole exercise was to prove whether the USM had drifted or not. And thereby reduce the need for laboratory recalibration.

Experts from oil companies and regulators come together to decide