An innovative approach to increase diagnostic sensitivity in ultrasonic flow meters

by

Daniel Heinig, SICK

Agenda

- Motivation
- Literature study
- Introduction of the „Condition based indicator“ (CBI)
- Summary
- Next steps

Motivation

- Goals for operators of gas metering stations
  - **Reduce** initial **uncertainty** budget to a (reasonable) minimum
  - Ensure **long term stability** of operation
  - Overall: **reduce financial risk / unaccounted-for gas**

Motivation

- Typical influencing factors for USM uncertainty after commissioning:
  - Installation effects (e.g. flow profiles from headers, elbows, etc.)
  - Pressure & Temperature measurement, gas composition
  - Control valve noise
  - Pipe corrosion and build-up
  - And others …

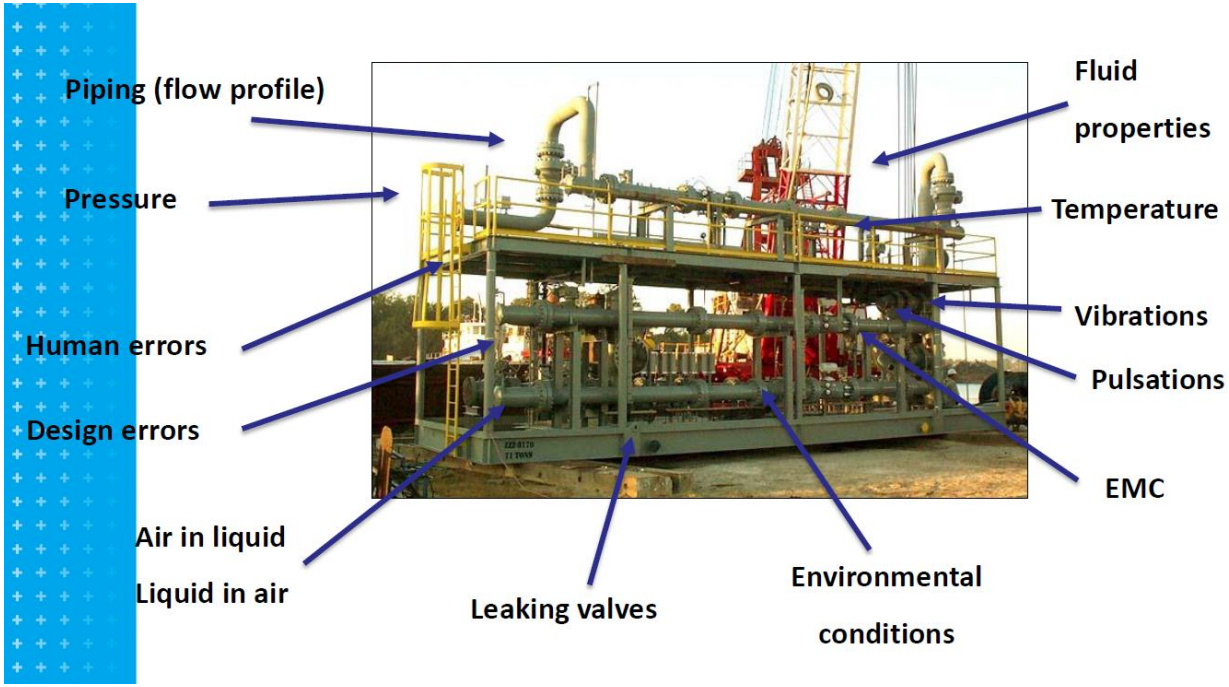

Source: Wim Volmer, „Metrological Reliability“, EFMWS 2013

Motivation

- Several tests & researches were performed in the past to determine impact of corrosion and wall roughness to USM uncertainty

- Papers have addressed USM diagnostic capabilities to detect changes in wall roughness and build-up

- Additionally check meter for verification recommended (master-check-meter concept)

➔ This paper discusses an innovative approach on how to increase diagnostic sensitivity for a direct path USM without adding additional hardware (Sensors / Electronics).

Time for Literature Study

Technical Paper 1

Dirty vs. Clean USM from 2002

- „Dirty vs. Clean USM performance“, Lansing, ISFFM 2002

DIRTY VS. CLEAN ULTRASONIC GAS FLOW METER PERFORMANCE

The 5th International Symposium on Fluid Flow Measurement

John Lansing, Daniel Industries, Houston, TX

Introduction

The use of ultrasonic meters (USMs) for natural gas custody applications during the past few years has increased at a remarkable rate. The growth rate increased after the publication of Measurement Canada's PS-G-E-06 Provisional Ultrasonic Specification [Ref 1] and AGA Report No. 9, *Measurement of Gas by Multipath Ultrasonic Meters* [Ref 2] in June of 1998. The many benefits of USMs have been well documented over the past few years [Ref 3]. With the increased population of USMs in the gas industry, many users are asking more questions about this technology.

One of the issues often inquired about is the performance (accuracy) of an ultrasonic meter once the internal surface changes from the original clean calibrated condition. The accuracy of all metering devices is affected when less-than-clean, pipeline quality gas contaminates the inside of the meter, the

Picture 9 –Bottom of 10-Inch Meter

Picture 10 – Close-up of Upstream Spool Piece

Picture 15 – Flow Conditioner Plate

- Two main impacts on USM performance:
  - Change in Diameter → Over reading
  - Change in flow profile → adding uncertainty
  - Errors up to 0.5% observed
  - Flow profile diagnostics potentially identify corrosion & build-up

Technical Paper 2

Two different Path Layouts, 2007

- Relevance of two different path layouts“ Lansing/Herrmann/Dietz, NSFMW, 2007

THE RELEVANCE OF TWO DIFFERENT PATH LAYOUTS FOR DIAGNOSTIC PURPOSES IN ONE ULTRASONIC METER

MR. JOHN LANSING, SICK | MAIHAK, Houston, Texas
DR. VOLKER HERRMANN, SICK | MAIHAK, Dresden, Germany
MR. TORALF DIETZ, SICK | MAIHAK, Dresden, Germany

1. ABSTRACT

During the past several years the use of ultrasonic meters (USMs) has gained world-wide acceptance for fiscal applications. The many benefits of USMs have been documented in several papers at virtually every major conference. As the cost of gas continues to increase, the importance of knowing that the ultrasonic meter is operating accurately has never been more important. The use of diagnostics to help identify metering issues has been discussed in several papers over the past few years [Ref 1 & 2].

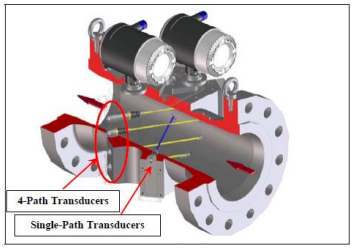

Figure 1: CBM 4+1 Meter Design

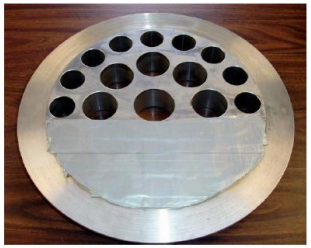

Figure 6: 12-inch CPA with 40% Blockage

Figure 18: 12-inch Dirty Piping Close Up

Figure 5: 12-inch 4+1 CBM Meter CEESI

- First introduction of Fiscal + „sensitive“ Check meter for advanced diagnostics
- Relative comparison of measured volume
- Changes in wall roughness or FC blockage can be detected by check meter before the fiscal meter reacts
- Some details …

Two different Path Layouts

4+1 Meter Design

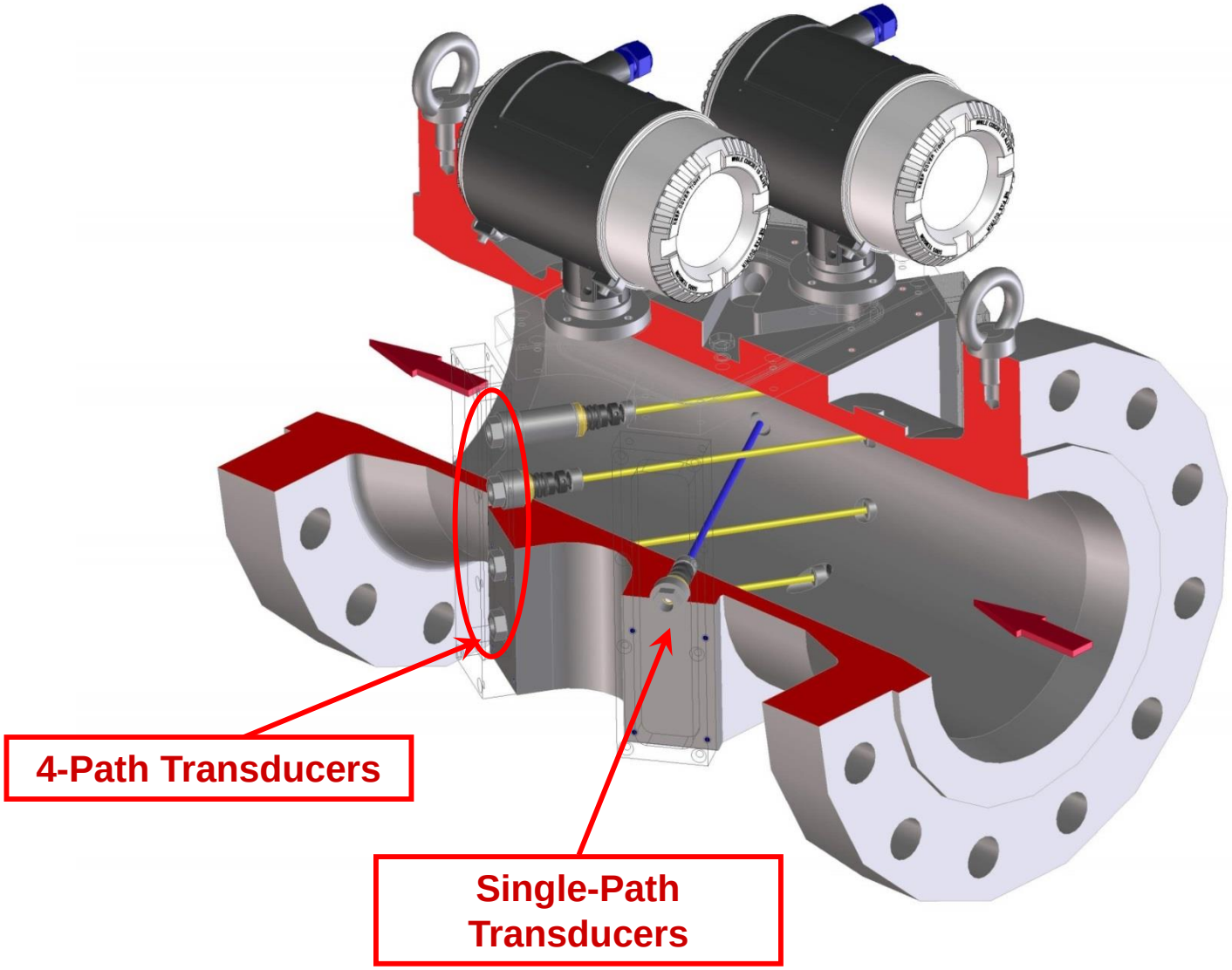

Two different Path Layouts

Flow Conditioner Test Program

- 8, 10, 12 inch USM tested with
  - Blocked FC (one hole, 3 holes, 40%)
  - Dirty FC – particle

One hole

3-holes

40%

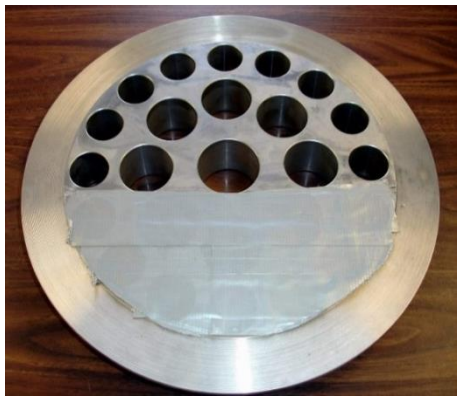

Dirty

Two different Path Layouts

Flow Conditioner Test Program

- Testing at CESSI back in 2006, 2007 and 2009

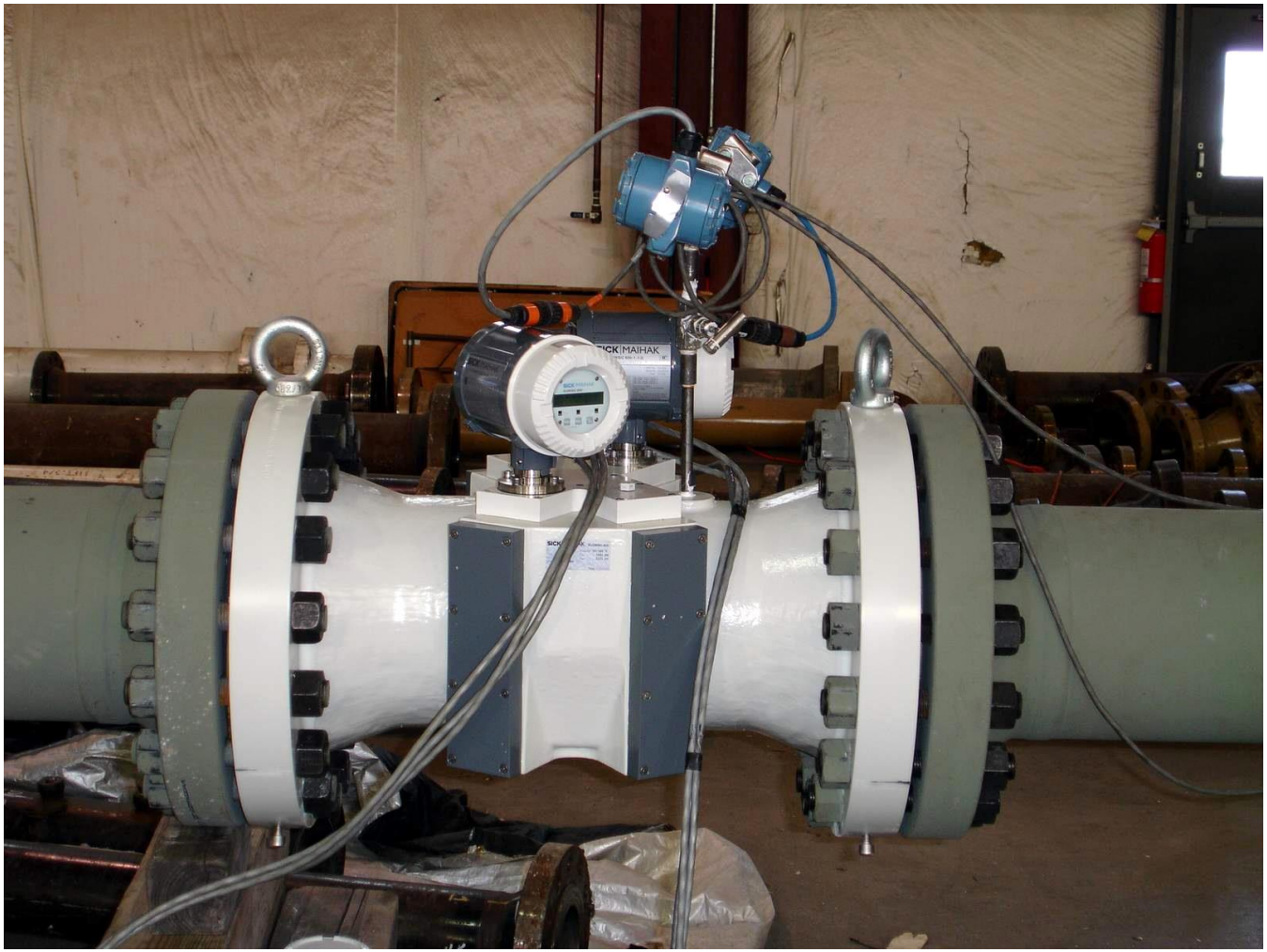

Two different Path Layouts

Some Results

- 12 inch, 4-path, 1 hole blocked

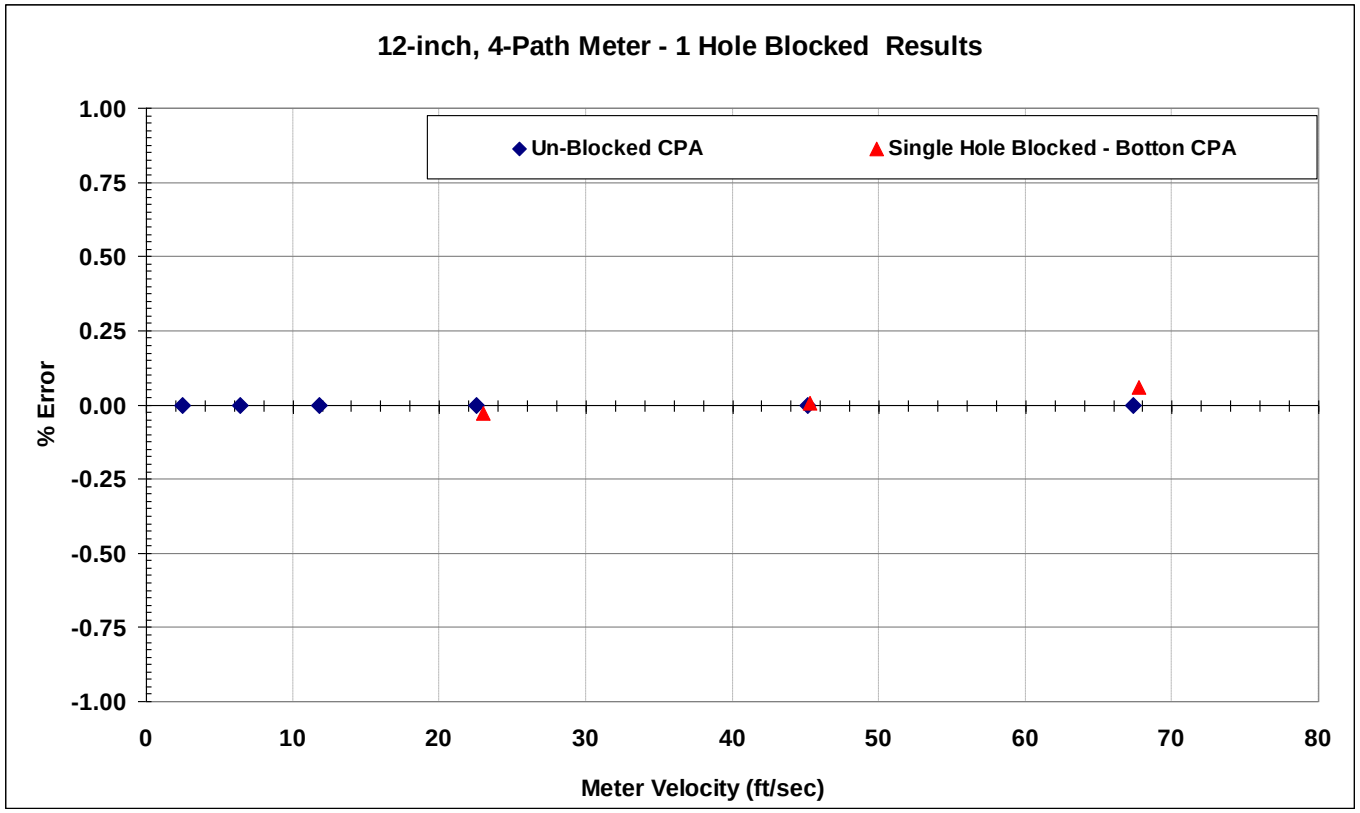

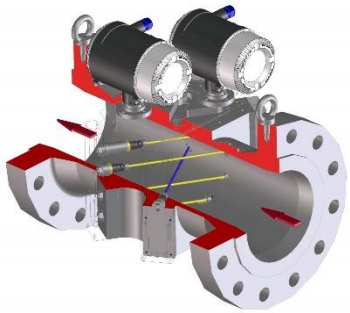

Two different Path Layouts

Some Results

- 12 inch, 1-path, 1 hole blocked

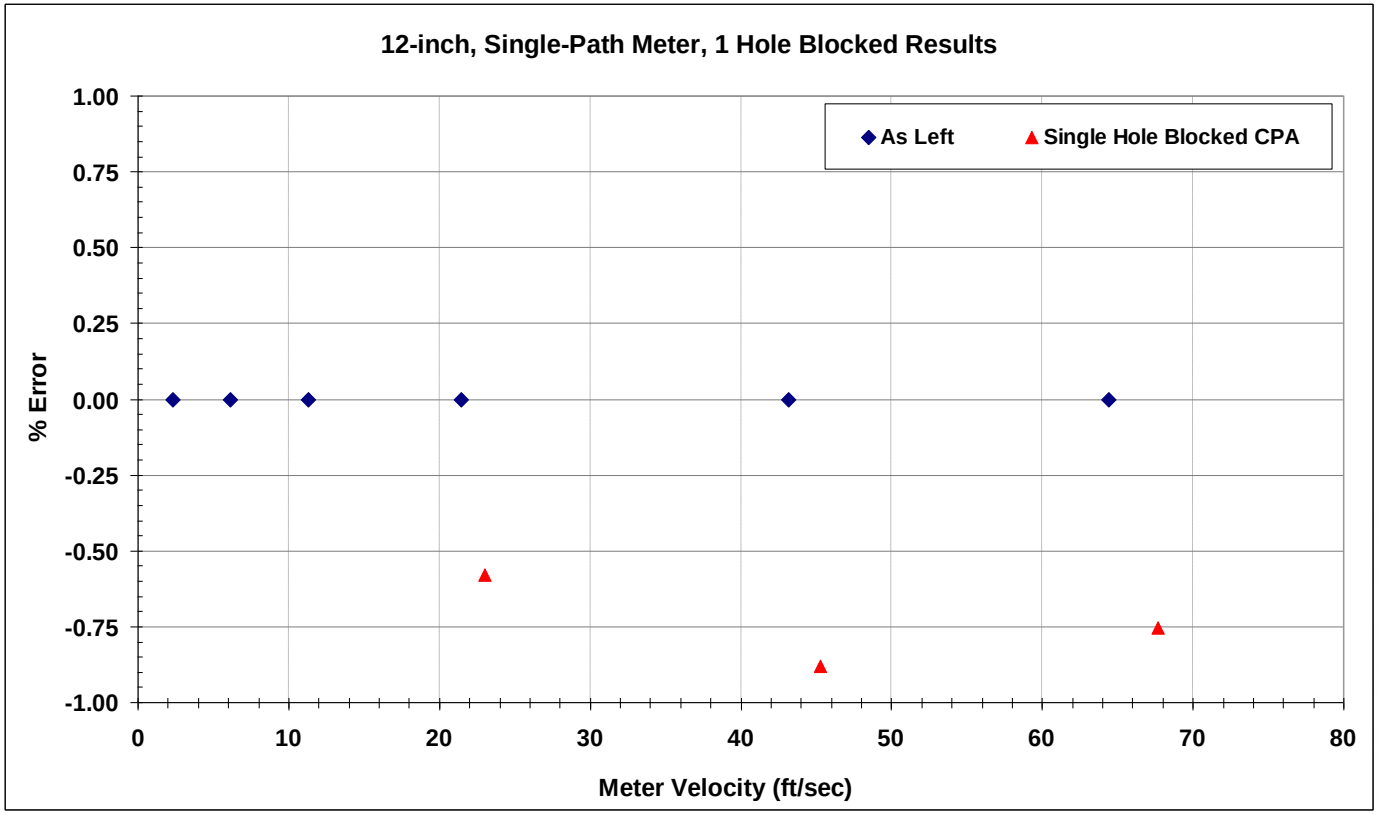

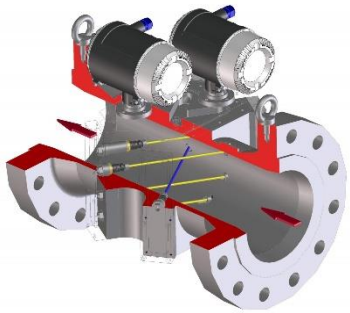

Two different Path Layouts

Some Results

- 12 inch, 4-path, 40% blocked

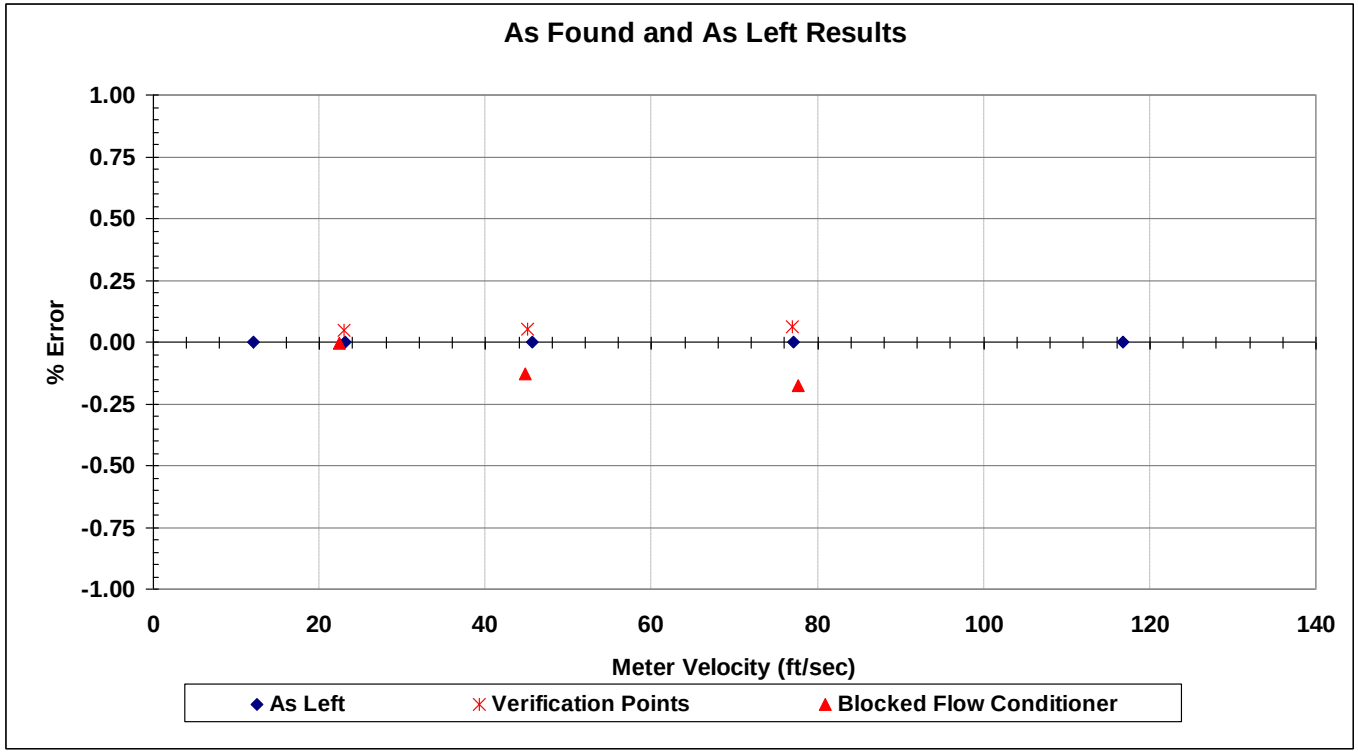

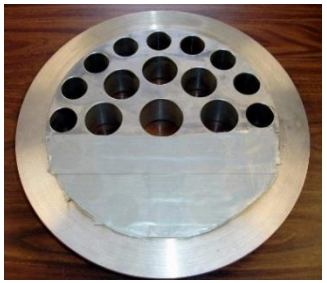

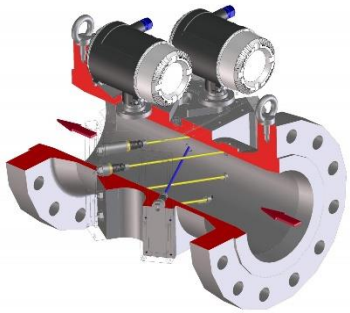

Two different Path Layouts

Some Results

- 12 inch, 1-path, 40% blocked

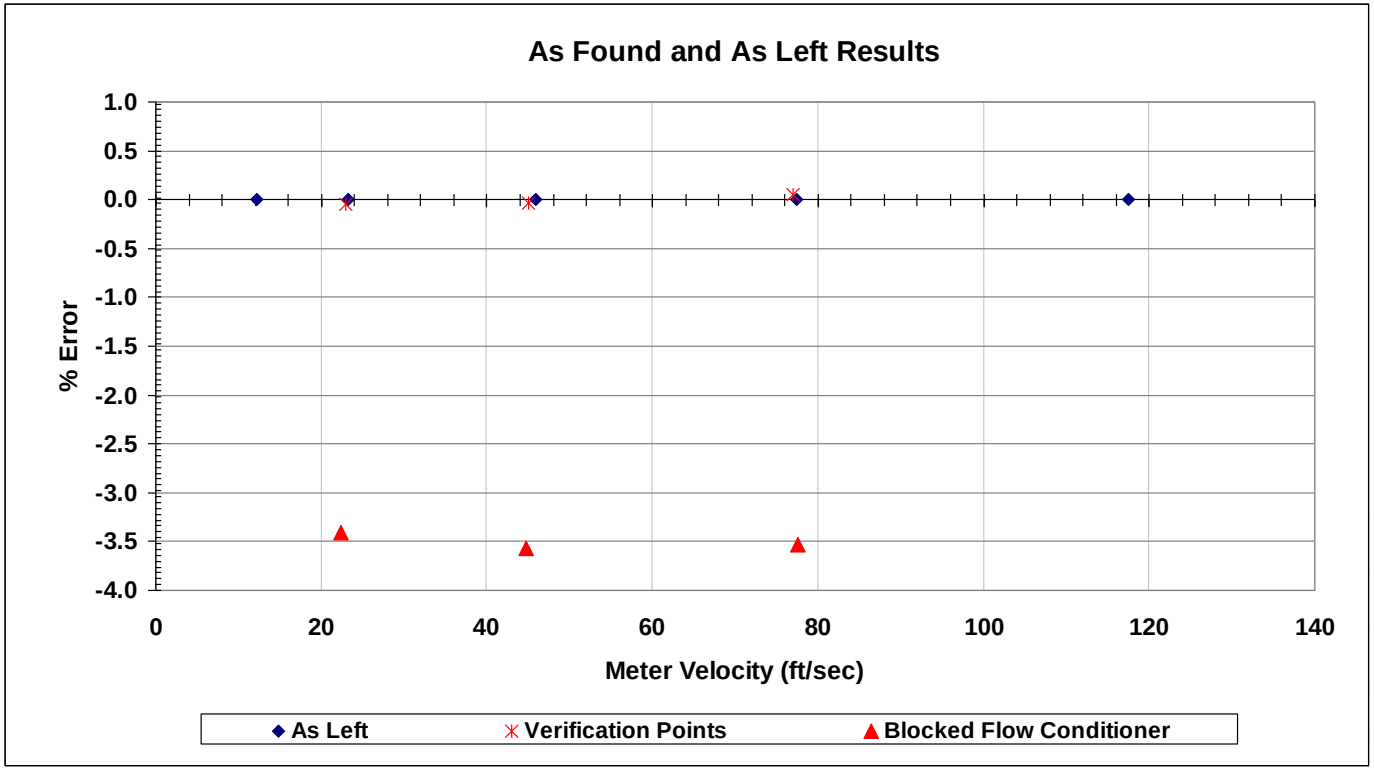

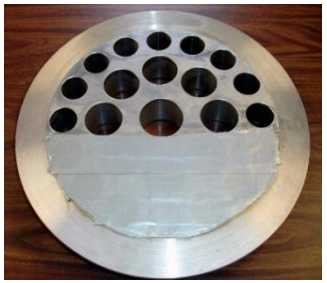

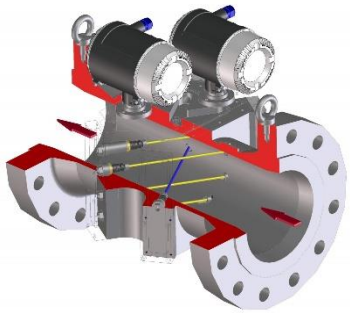

Two different Path Layouts

Some Results

- 12 inch, 4-path, clean vs. dirty meter

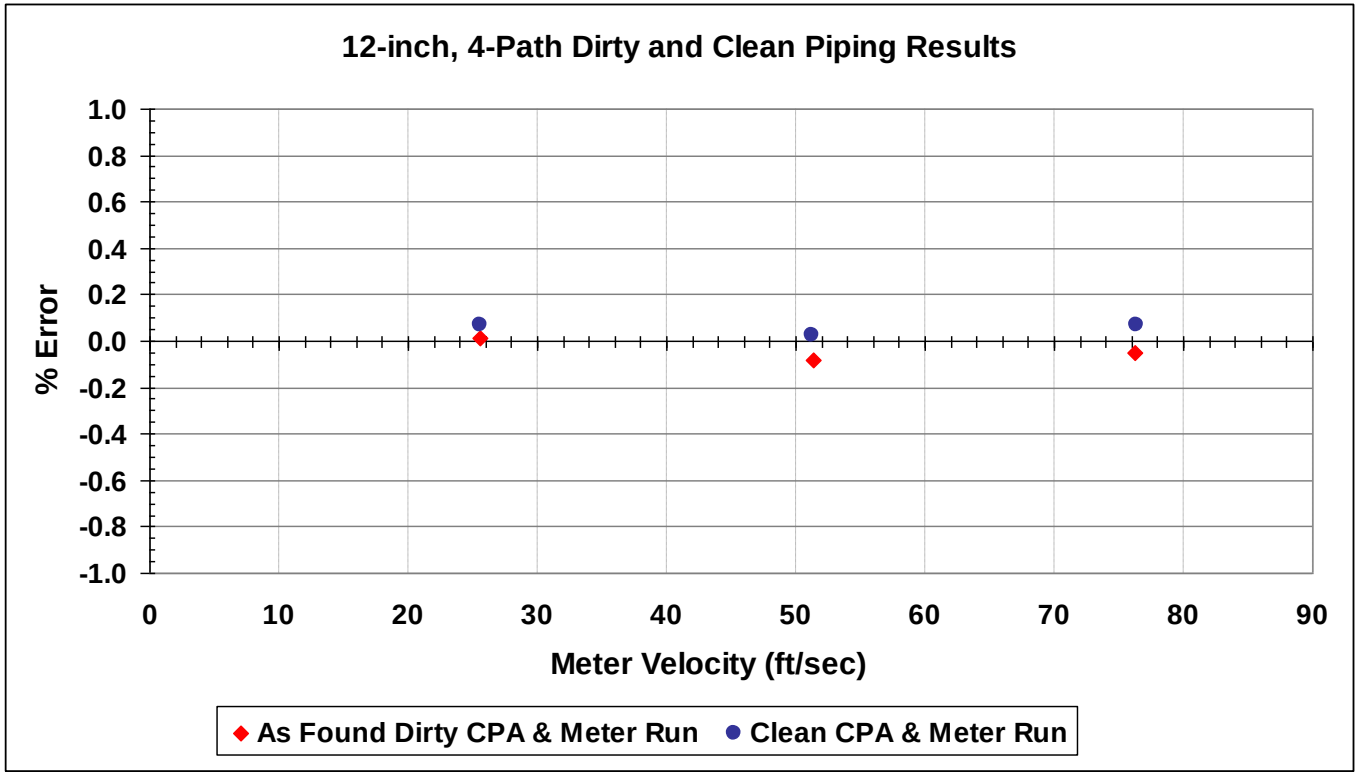

Velocity	% Diff.
76.3	-0.12
51.4	-0.10
25.6	-0.05

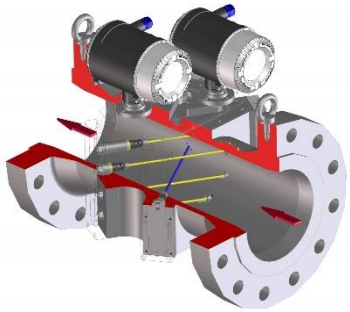

Two different Path Layouts

Some Results

- 12 inch, 1-path, clean vs. dirty meter

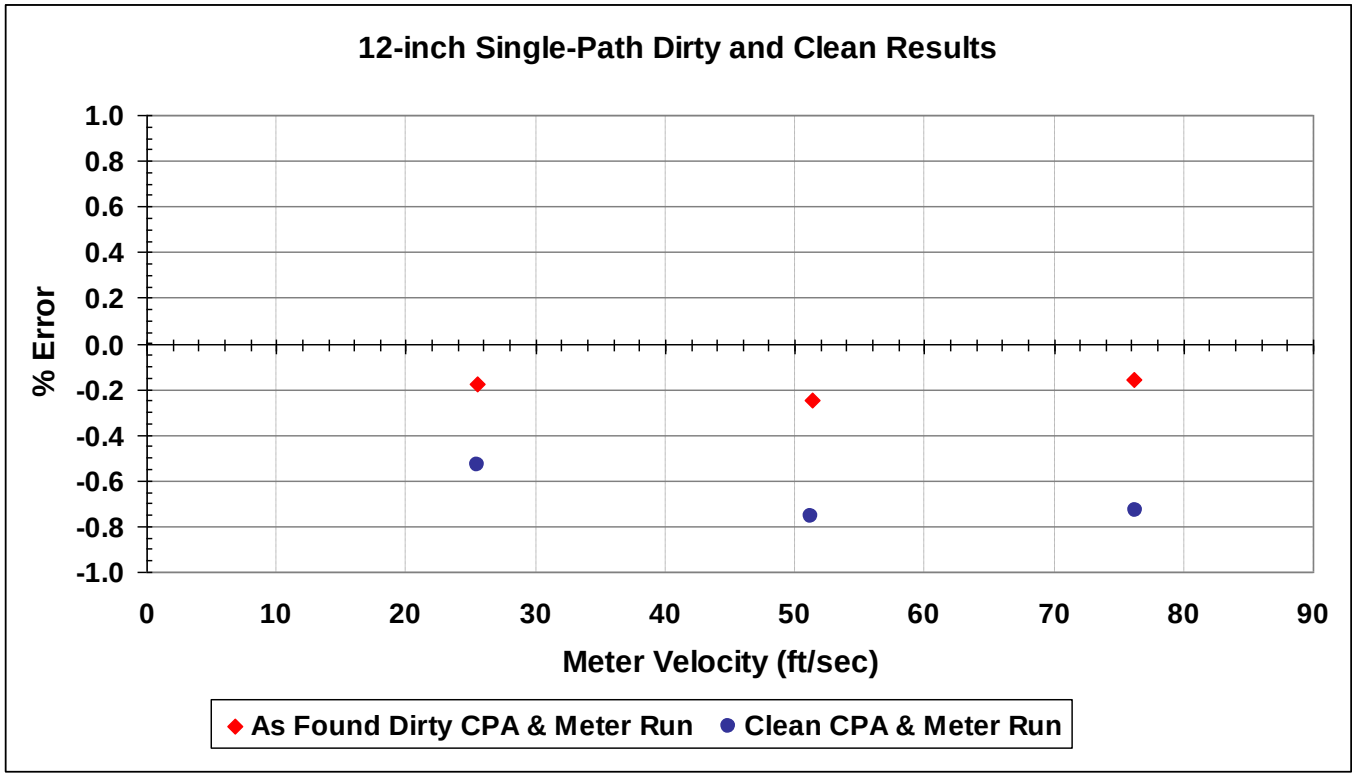

Velocity	% Diff.
76.3	-0.12
51.4	-0.10
25.6	-0.05

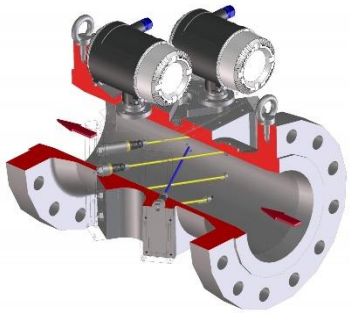

Technical Paper 3

Finger Print

- Diagnostic fingerprint“, Schäfer/Dietz/Herrmann/Peterka, NSFMW, 2010

28th International North Sea Flow Measurement Workshop
26th – 29th October 2010

Diagnostic Fingerprint – A New Method for Fully Automated Accuracy Monitoring in Ultrasonic Meters

Dr. Stephan Schäfer, SICK AG, Dresden, Germany
Toralf Dietz, SICK AG, Dresden, Germany
Thomas Horst, SICK AG, Dresden, Germany
Ing. Konrad Peterka PMSc, OÖ. Ferngas Netz GmbH, Austria
Dr. Volker Herrmann, SICK AG, Dresden, Germany

1 Introduction

Due to their advantages, advanced ultrasonic gas meters are used in gas quantity metrology on a steadily increasing scale, and they stopped being regarded as "exotic" a long time ago. The multitude of diagnostic information that can be provided by the meter is unique. However, the user is often not able to benefit from this information unless he can fall back on specialist assistance in evaluating the data. Therefore, the question is more and more how to make this variety of information controllable for the "non-expert" as well as the experienced user.

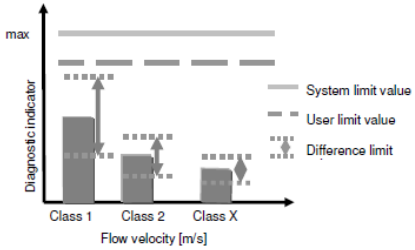

Figure 10: Principles for monitoring the diagnostic indicators

(a)

(b) **Profile Factor shift due to wall roughness**

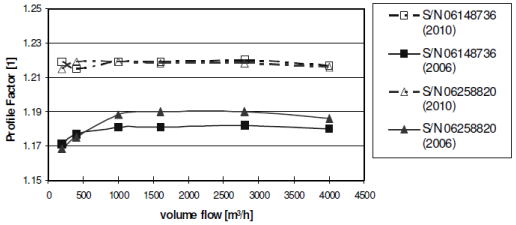

Figure 13: Profile Factor shift due to wall roughness.

- Introducing finger print concept based „gas flow classes“ to improve evaluation of diagnostics
- Changed perspective from actual data to trend analysis
- Calibration vs. commissioning vs. actual condition

Technical Paper 4

Influence of Wall Roughness

- „Consideration on the influence of changes in wall roughness on USM accuracy“ Horst/Jakschik/Dietz/Riezebos/Herrmann, NSFMW, 2011

29th International North Sea Flow Measurement Workshop
25th – 28th October 2011

Considerations on the influence of deposits or changes in wall roughness on the validity of the calibration and long term accuracy of ultrasonic gas flow meters

Thomas Horst, SICK AG, Dresden Germany
Alexander Jakschik , SICK AG, Dresden, Germany
Toralf Dietz, SICK AG, Dresden, Germany
Henk Riezebos, KEMA Nederland BV, The Netherlands
Dr. Volker Herrmann, SICK AG, Dresden Germany

1. Introduction

Due to refined diagnostic capabilities and the lack of moving mechanical parts, ultrasonic flow meters (USMs) provide excellent reliability and long-term stability. These properties lead to high accuracy and low costs of operation in the field. Recent studies [2] have shown how meter performance changes after electronics or transducers are replaced. This demonstrates the high precision of time-of-flight measurement with up-to-date components. Nevertheless, some installation parameters relevant to meter accuracy may change after a long period of operation. For instance, in many situations in the field, inner pipe wall corrosion and contamination can occur. These pollutions of the inner pipe wall may influence the geometrical parameters and/or wall roughness of the pipe and consequently the shape of the flow profile.

Picture 3: FLOWSIC600 2plex at the KEMA test facility in Groningen (NL)

Picture 4: Initiating the accelerated corrosion of inner meter and pipe surface using brine

- Meter & pipe corrosion testing
- Changes in wall roughness can be identified by diagnostics
- Recommendation: Equip meter with corrosion protection, e.g. nickel coating
- Some details…

Technical Paper 4

Influence of Wall Roughness – Test Program

Use case 1 – new meter

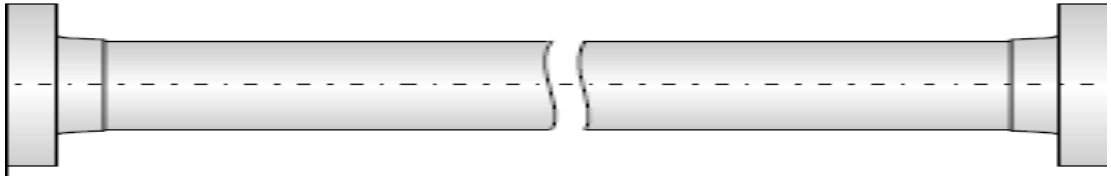

+

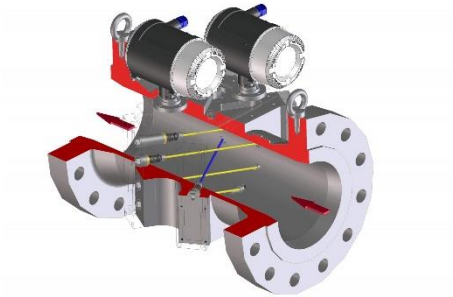

CS pipe – “new”
CS pipe – “marginal corroded”
CS pipe – “smooth”
CS pipe – “completely corroded”

FLOWSIC600 2plex (4+1) – “brand- new”

Use case 2 – Corroded meter

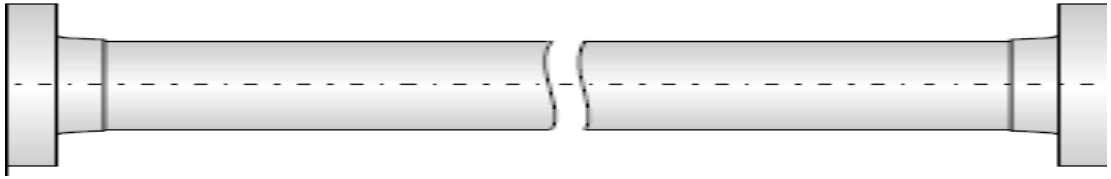

+

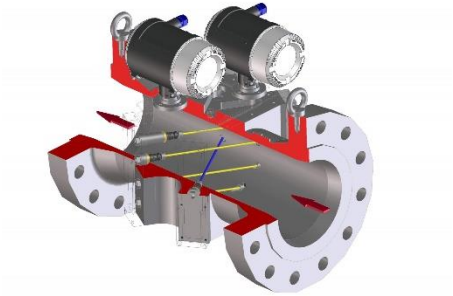

CS pipe – “new”
CS pipe – “marginal corroded”
CS pipe – “smooth”
CS pipe – “completely corroded”

FLOWSIC600 2plex (4+1) – “corroded”

Technical Paper 4

Influence of Wall Roughness – Test Program

North Sea FLOW Measurement Workshop

Use case 1 – new meter

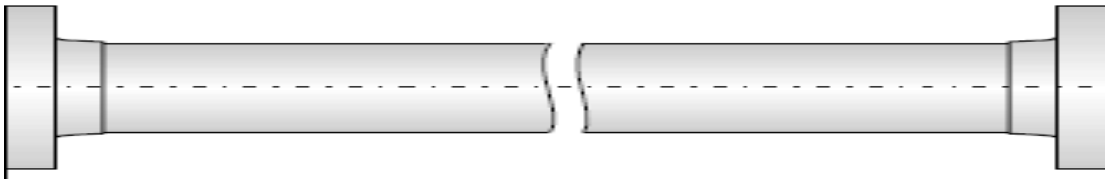

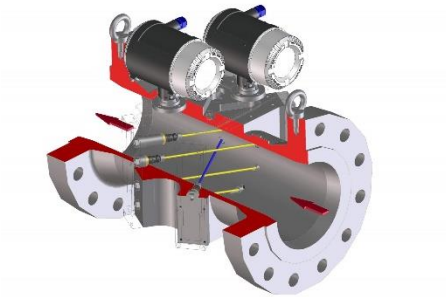

CS pipe – “new”
CS pipe – “marginal corroded”
CS pipe – “smooth”
CS pipe – “completely corroded”

FLOWSIC600 2plex (4+1) – “brand- new”

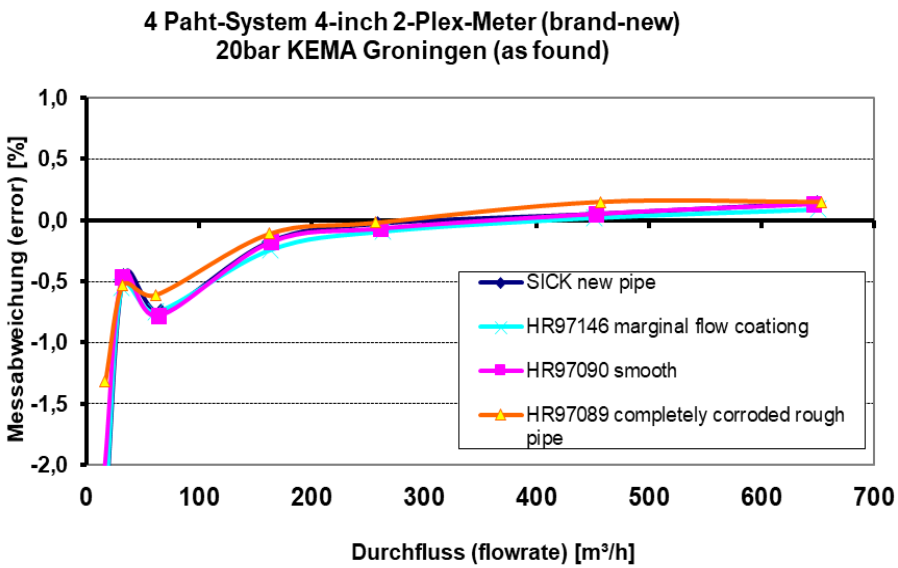

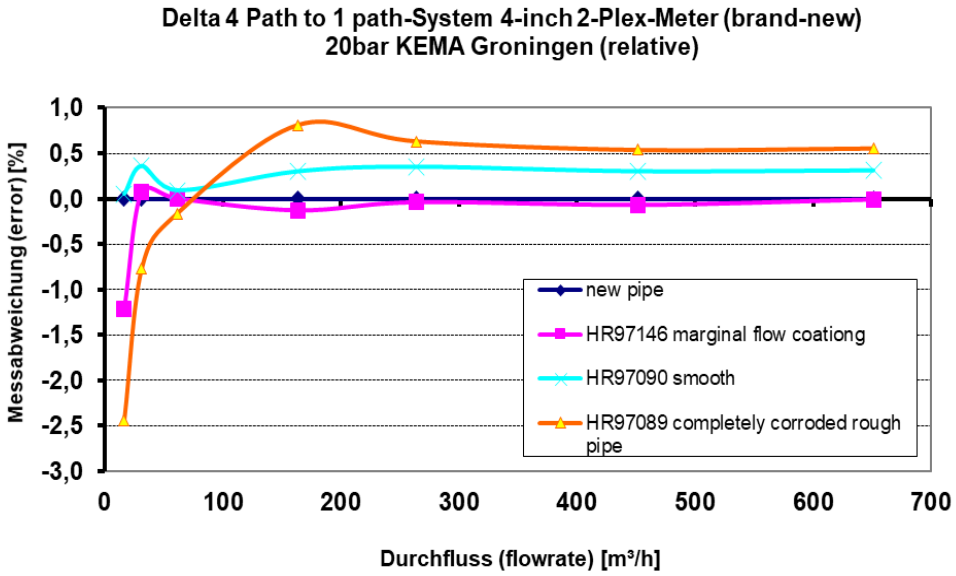

Technical Paper 4

Influence of Wall Roughness – Test Program

North Sea FLOW Measurement Workshop

Use case 2 – Corroded meter

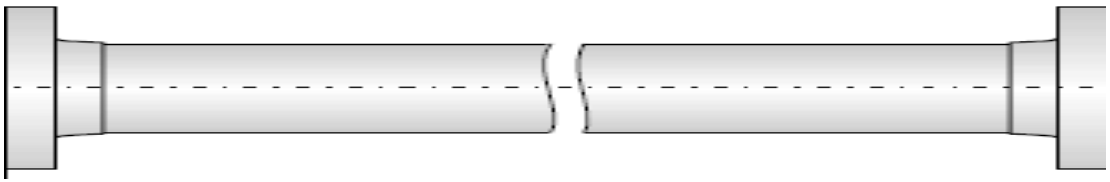

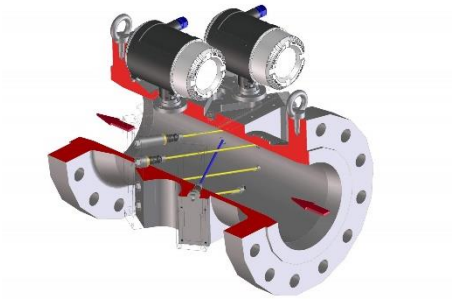

CS pipe – “new”
CS pipe – “marginal corroded”
CS pipe – “smooth”
CS pipe – “completely corroded”

FLOWSIC600 2plex (4+1) – “corroded”

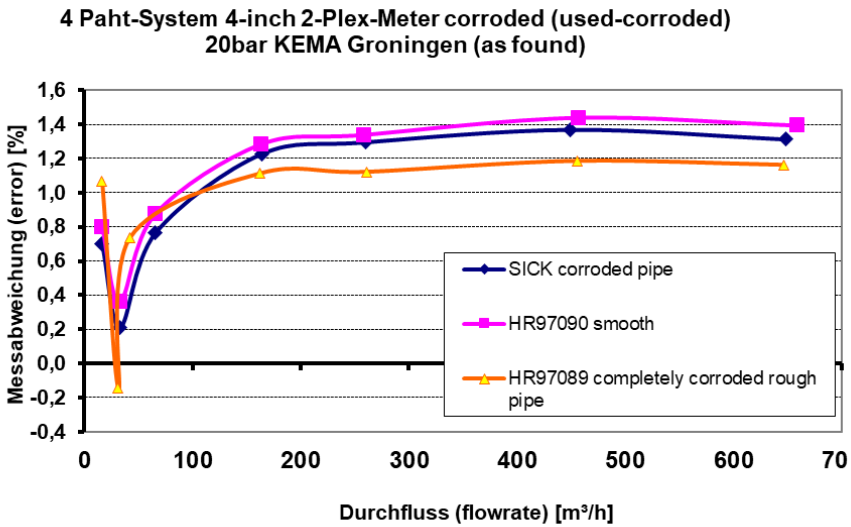

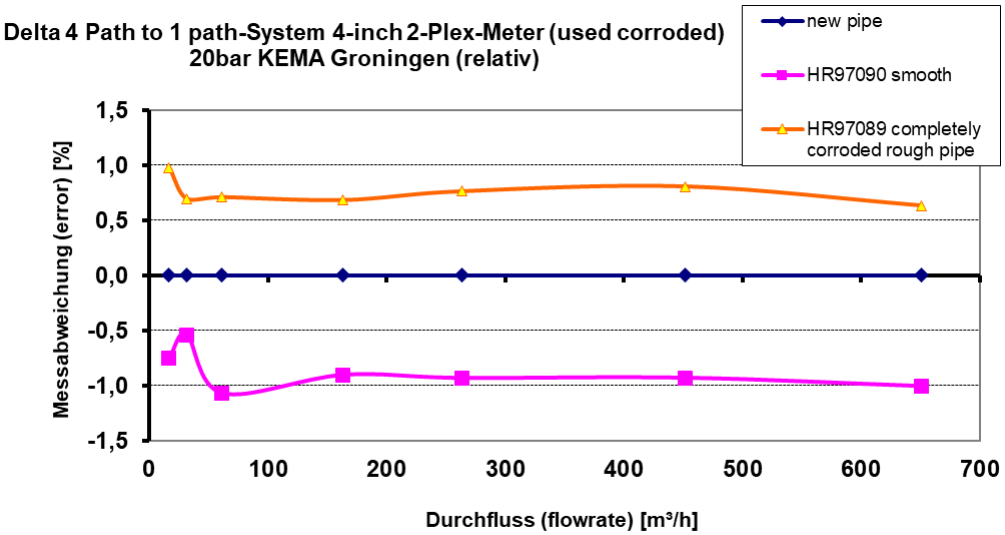

Technical Paper 4

Influence of Wall Roughness – Conclusion

- Protect meter from corrosion is key to reduce uncertainty impact
- Nickel coating as the solution for LTCS meters
- If meter corrodes, uncertainty bias due to:
  - Diameter change, leading to over reading at small size meters
  - Wall roughness
    - ➔This impacts ALL meters
- 1 path systems detects changes in wall roughness before it effects meter accuracy
- Diametric path layout is most sensitive to flow profile changes

Summary of Literature Study

Publications on USM & Wall Roughness / Corrosion

- Many research done on effects on accuracy for USM & effect of corrosion
- Diagnostics is powerful for pre-indicating corrosion & build up
- Sensitive check meter systems help to improve diagnostic indication

Dirty vs. Clean Ultrasonic Gas Flow Meter Performance

JOHN LANSING, Manager, Gas Ultrasonics, Daniel Industries, Houston, TX
TOM MOONEY, Business Development Manager, Gas Products, Stirling, Scotland, UK

1 ABSTRACT

The use of ultrasonic meters (USMs) for n
years has increased at a remarkable rat
documented over the past few years [Ref
gas industry, many users are asking ever n

One of the issues often inquired about is
once the internal surface changes from the
of all metering devices is affected when les
inside of the meter, the associated piping
meter's performance is generally thought to

THE RELEVANCE OF TWO DIFFERENT PATH LAYOUTS FOR DIAGNOSTIC PURPOSES IN ONE ULTRASONIC METER

MR. JOHN LANSING, SICK | MA
DR. VOLKER HERRMANN, SICK | M
MR. TORALF DIETZ, SICK | MAI

1. ABSTRACT

During the past several years the use of ultrasonic
acceptance for fiscal applications. The many benefi
several papers at virtually every major conference. A
the importance of knowing that the ultrasonic meter
more important. The use of diagnostics to help identi
several papers over the past few years [Ref 1 & 2].

28th International North Sea Flow Measurement Workshop
26th – 29th October 2010

Diagnostic Fingerprint – A New Method for Fully Automated Accuracy Monitoring in Ultrasonic Meters

Dr. Stephan Schäfer, SICK AG,
Toralf Dietz, SICK AG, Dres
Thomas Horst, SICK AG, Dre
Ing. Konrad Peterka PMSc, OÖ. Ferng
Dr. Volker Herrmann, SICK AG,

1 Introduction

Due to their advantages, advanced ultrasonic gas met
on a steadily increasing scale, and they stopped being
The multitude of diagnostic information that can b
However, the user is often not able to benefit from this
specialist assistance in evaluating the data. Therefore
make this variety of information controllable for the "n
user.

29th International North Sea Flow Measurement Workshop
25th – 28th October 2011

Considerations on the influence of deposits or changes in wall roughness on the validity of the calibration and long term accuracy of ultrasonic gas flow meters

Thomas Horst, SICK AG, Dresden Germany
Alexander Jakschik , SICK AG, Dresden, Germany
Toralf Dietz, SICK AG, Dresden, Germany
Henk Riezebos, KEMA Nederland BV, The Netherlands
Dr. Volker Herrmann, SICK AG, Dresden Germany

1. Introduction

Due to refined diagnostic capabilities and the lack of moving mechanical parts, ultrasonic flow meters (USMs) provide excellent reliability and long-term stability. These properties lead to high accuracy and low costs of operation in the field. Recent studies [2] have shown how meter performance changes after electronics or transducers are replaced. This demonstrates the high precision of time-of-flight measurement with up-to-date components. Nevertheless, some installation parameters relevant to meter accuracy may change after a long period of operation. For instance, in many situations in the field, inner pipe wall corrosion and contamination can occur. These pollutions of the inner pipe wall may influence the geometrical parameters and/or wall roughness of the pipe and consequently the shape of the flow profile.

The Time Line

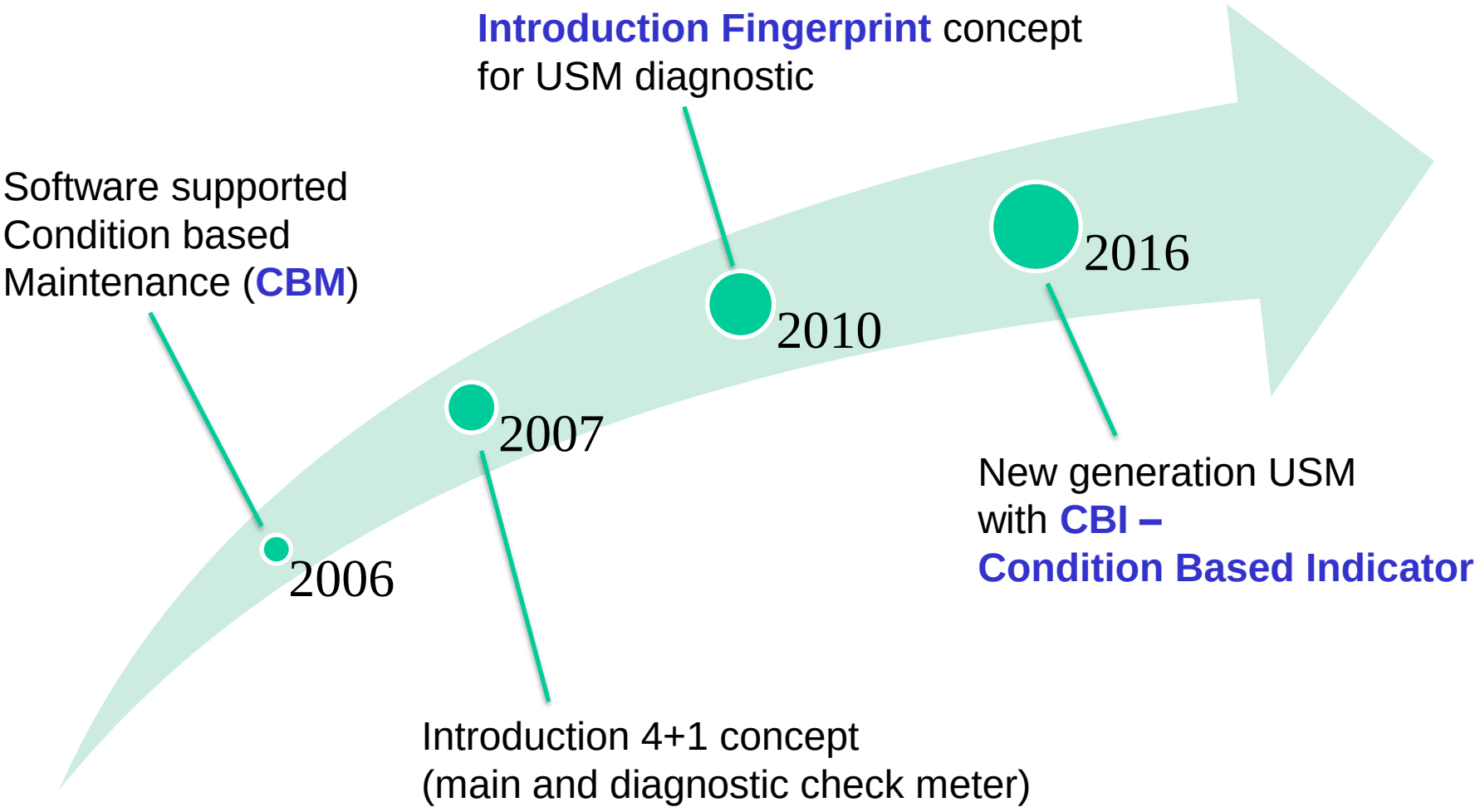

Condition Based Indicator (CBI)

How does it work?

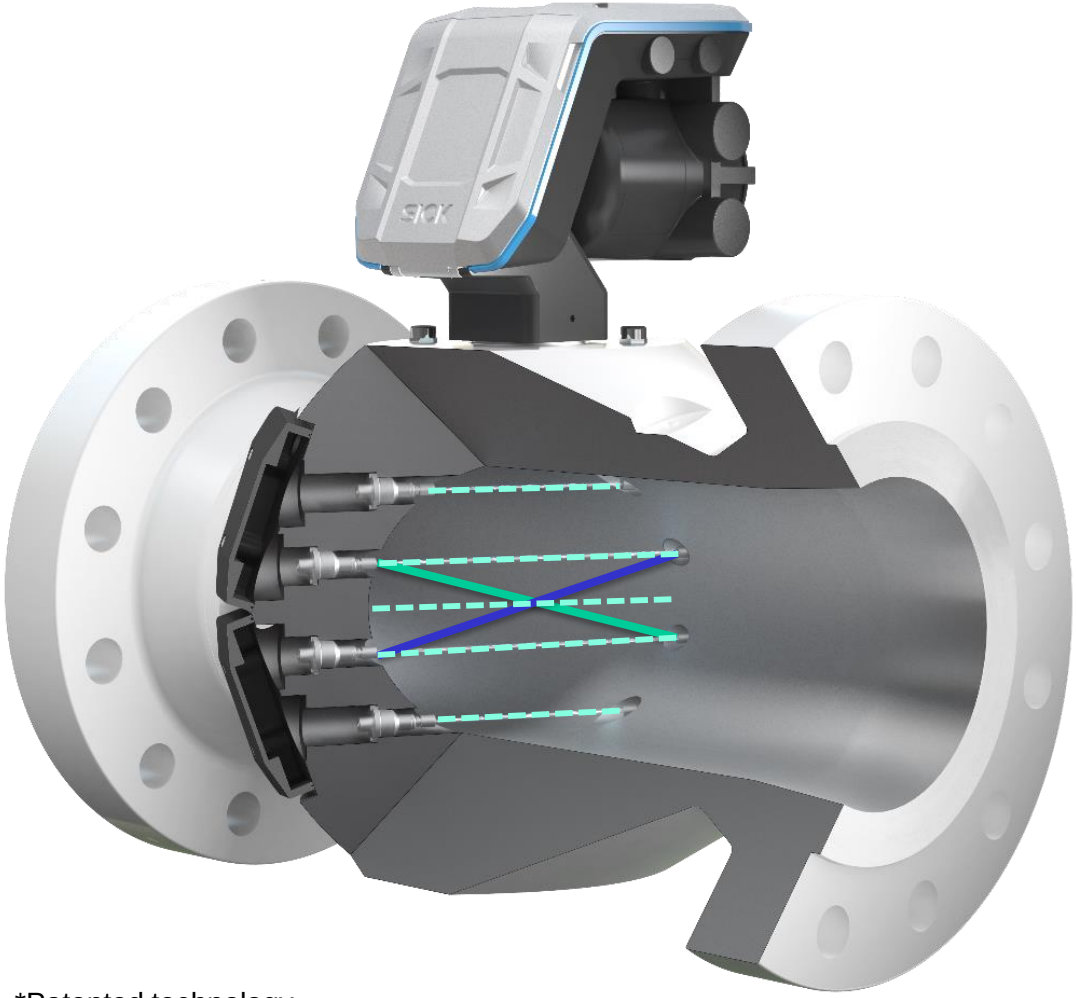

4-Path system, Westinghouse Design

- P1 … P4

Condition Based Indicator (CBI)*

- Measurement of diametric path
- Path velocity comparison to average VOG of 4-P system
- **P_X = CBI 1**
- **P_Y = CBI 2**
- Sequential firing @ 10/s measurement rate

$$CBI[\frac{m}{s}] = f(VOGpx,\ VOGpy,\ VOGavg)$$

*Patented technology

Condition Based Indicator (CBI)

How does it work?

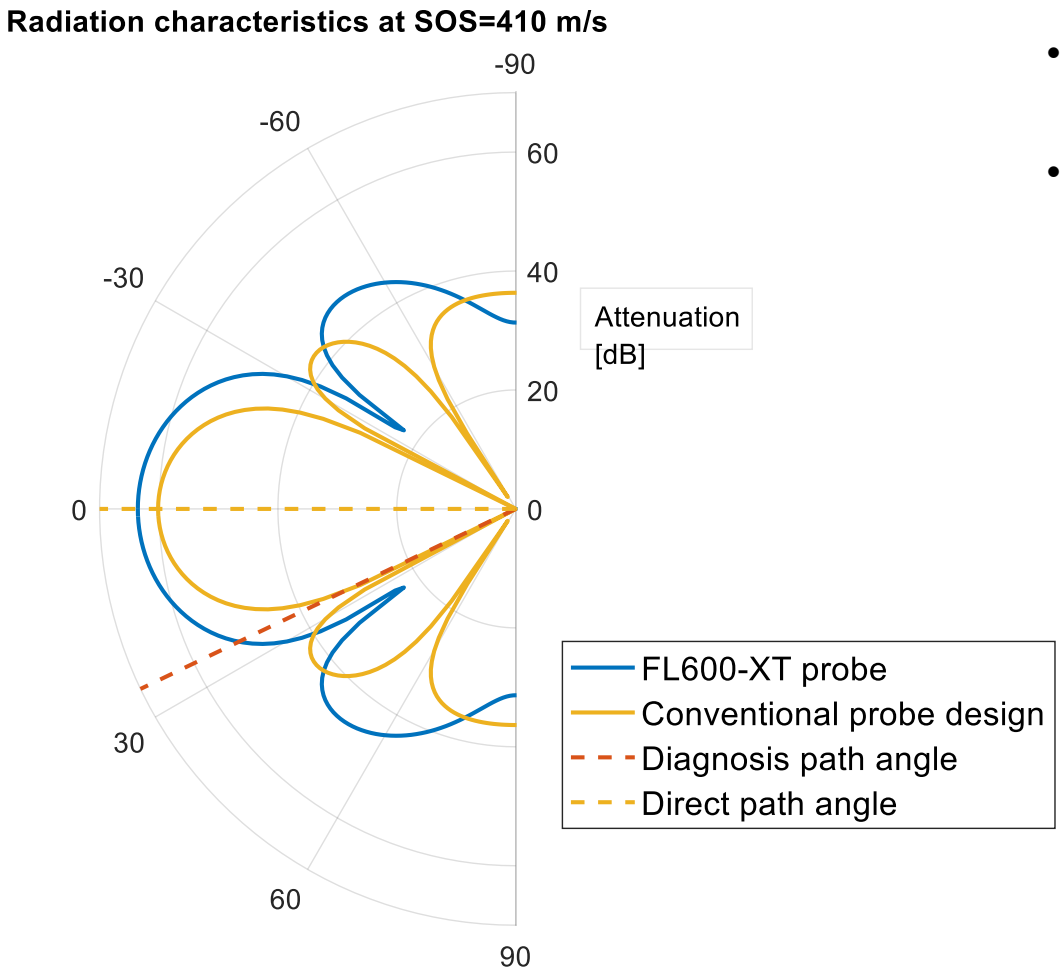

- Transducer design with wider path angle
- Electronics with improved signal gain

Condition Based Indicator (CBI)

How does it work?

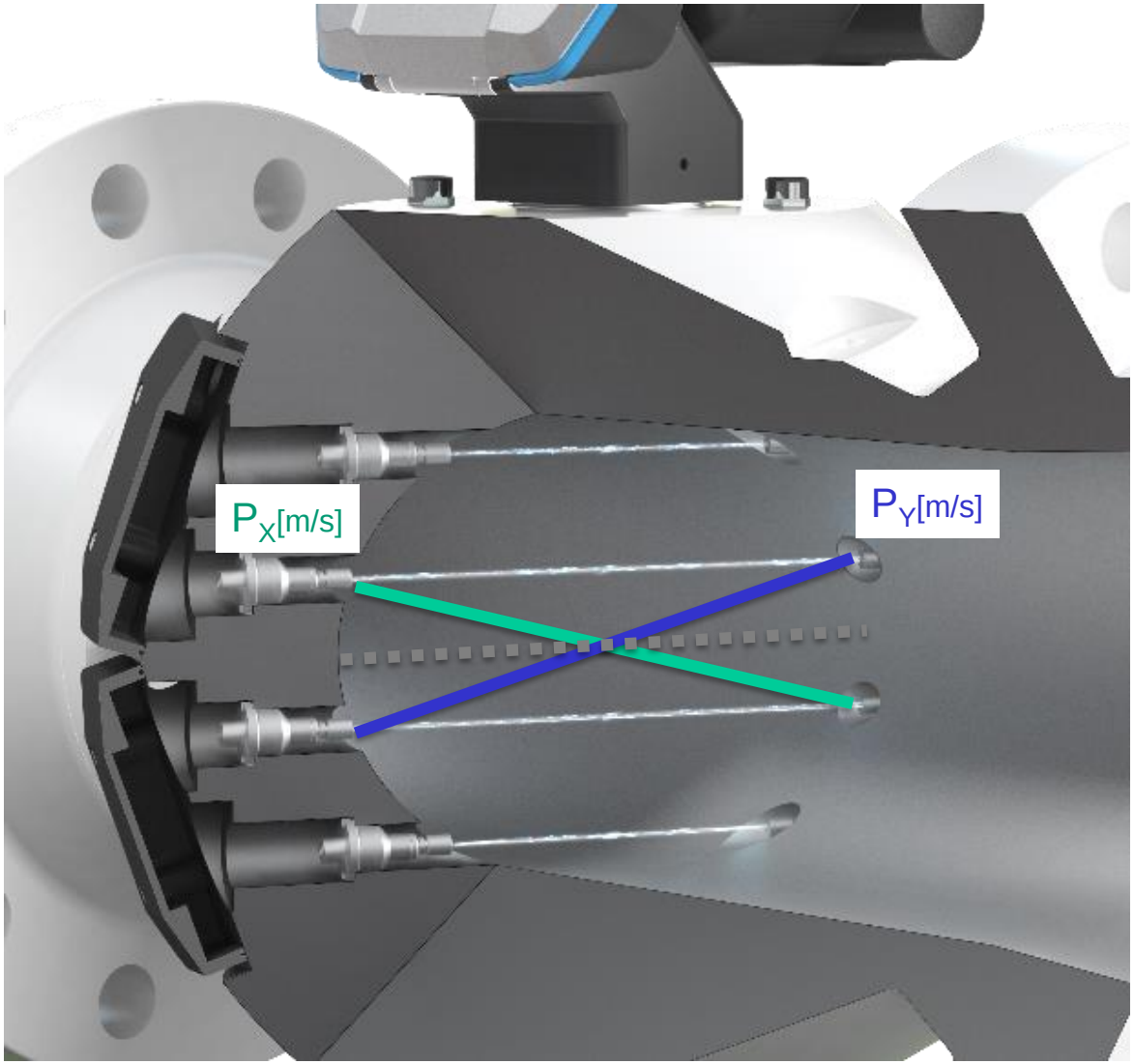

- CBI: single path measurement with same number of transducers & hardware!
- Applicable in 4/8-path meters
- CBI has high sensitivity to Reynolds number and flow profile changes
- **Linear** over flow range ($Q_t \ldots Q_{max}$)

Condition Based Indicator

CBI vs. 1-path Correlation

- Easy verification test with blocked FC (1 m/s … 6 m/s)
- Good correlation between 1P System and CBI

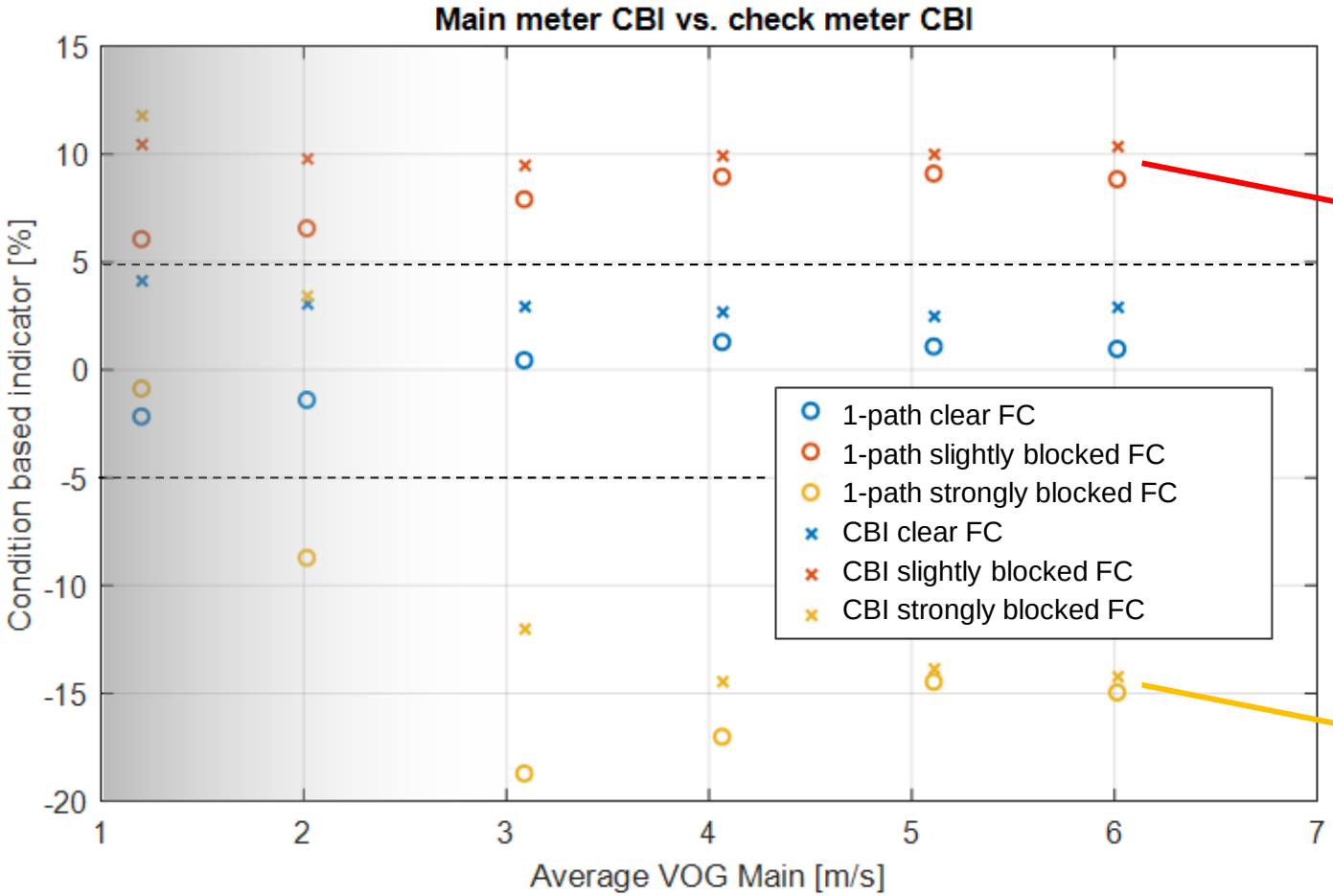

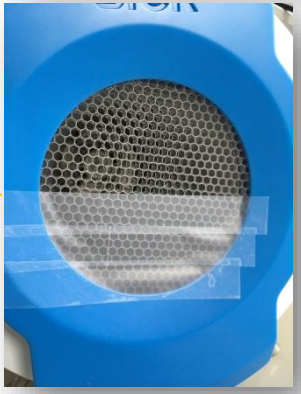

Condition Based Indicator

Field Data

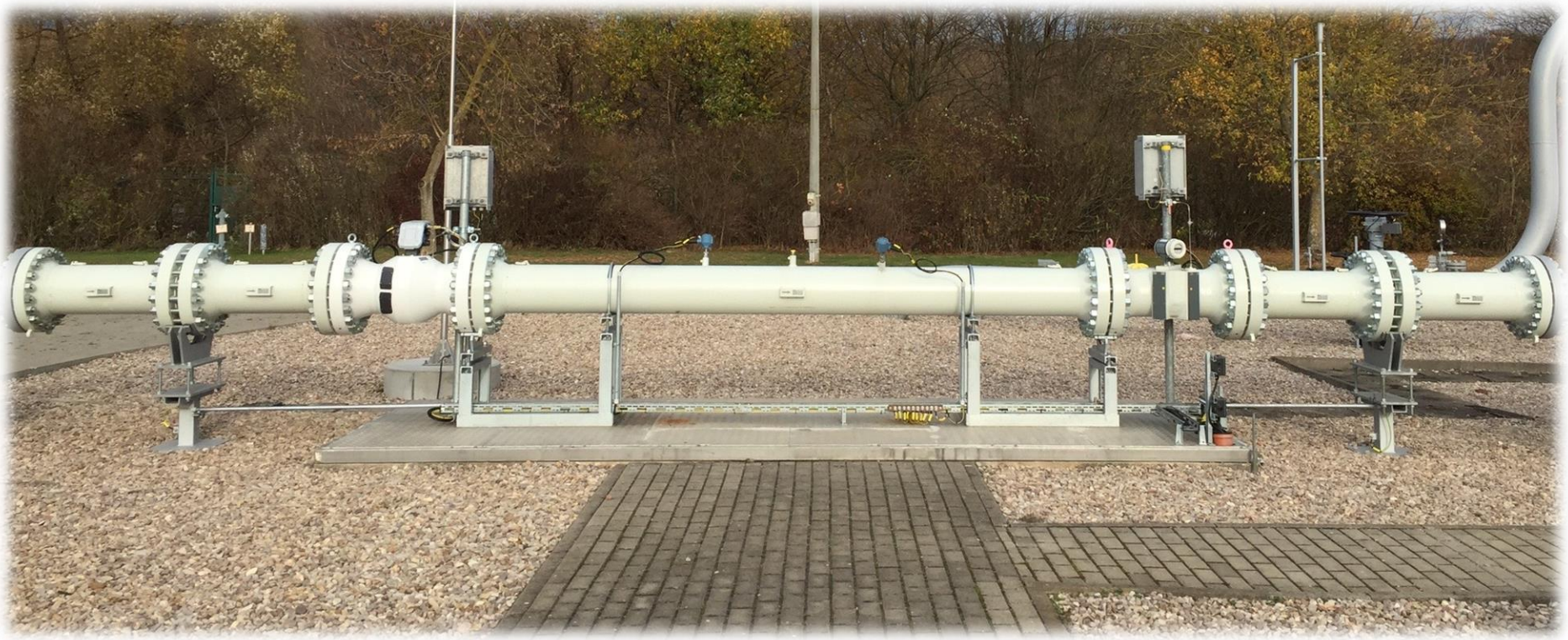

- Bi-directional installation of FLOWSIC600 and 600-XT in natural gas underground storage
- Commissioned in November 2015 and running for over 12 month
- Calibrated metering package ensures direct comparison over installation time

Condition Based Indicator

Field Data

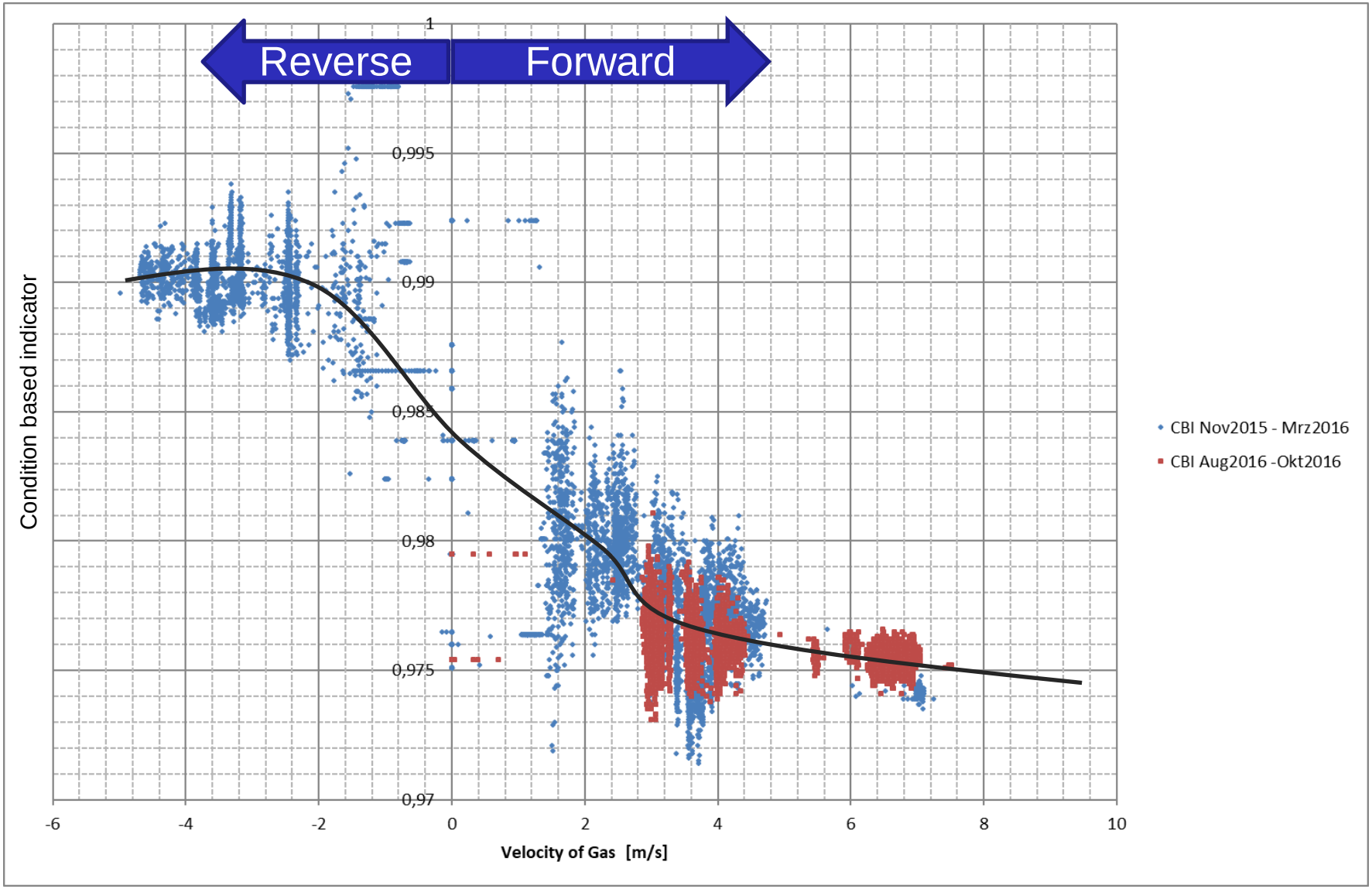

Condition Based Indicator

Field Data – Evaluation of 12 Months Operation

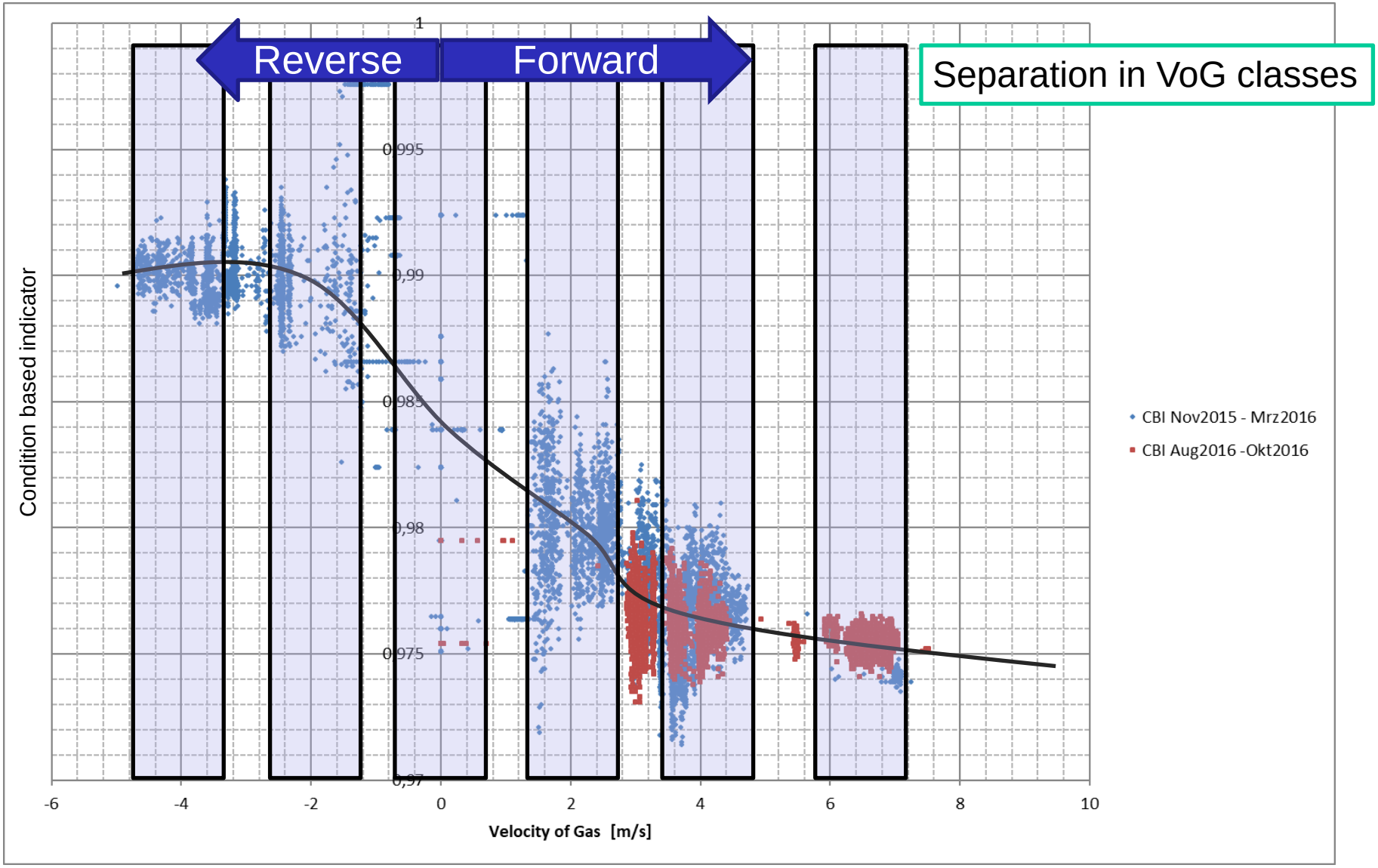

Condition Based Indicator

Field Data – Evaluation of 12 Months Operation

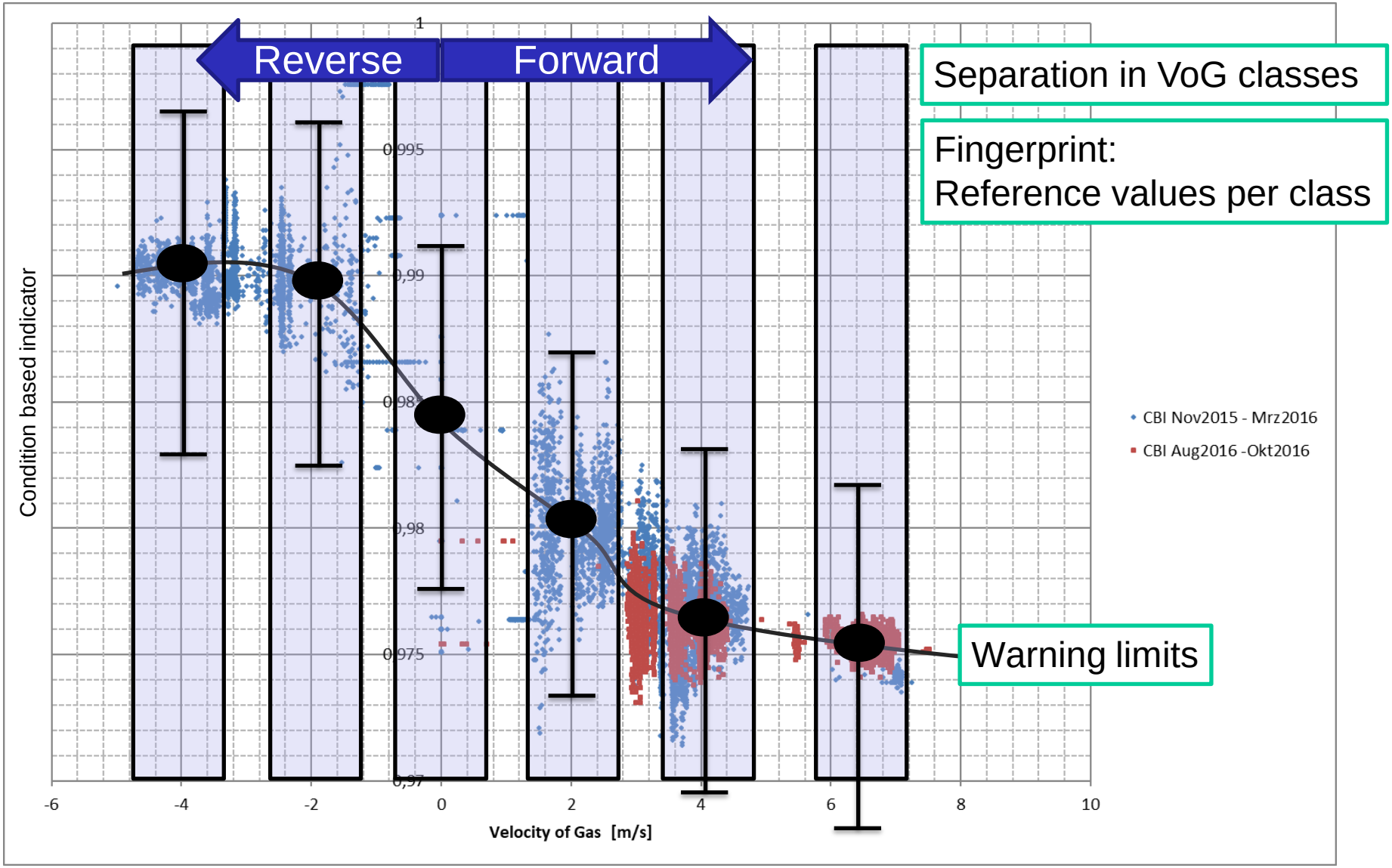

Condition Based Indicator

Trending and Finger Print

- CBI is part of the diagnostic fingerprint

- CBI is continuously recorded in the diagnostic archive

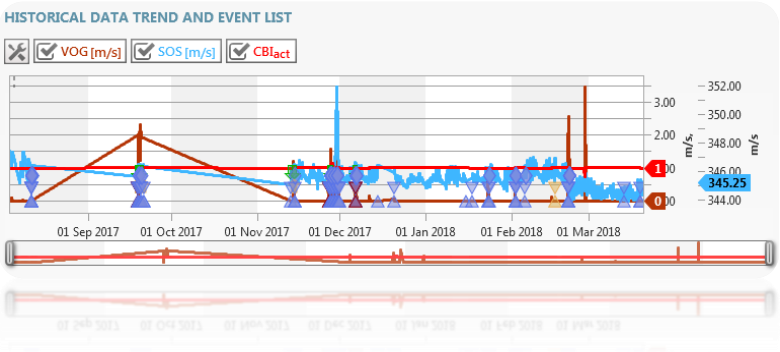

- Easy comparison between initial commissioning and life time
- Innovative additional diagnostic indicator for flow profile changes
- It helps to judge whether or not a re-calibration / inspection is required

Summary

- Corrosion and build-up: impact on measurement uncertainty
- Sensitive diagnostic systems enable ultrasonic meters to indicate changes in wall roughness & build-up
- Corrosion protection of flow meter (nickel coating) recommended to fully leverage the diagnostics

Summary

Condition Based Indicator (CBI)

- … an innovative approach to increase diagnostic sensitivity in a standard 4-path meter – without adding hardware
- … correlates to a physical 1-path measurement through the diametric path
- … can identify changes in wall roughness, build-up or blockage of flow conditioners
- … is a valuable additional flow profile indicator – next to symmetry and profile factor – that helps to estimate when calibration or meter inspection is required

Next Steps

Condition Based Indicator (CBI)

- Observation of the CBI in **field applications**
- Correlation to **re-calibration** results & prediction using CBI data
- Correlation to other diagnostic indicators
- Implementation for complete **application range**
  - Line size above DN400/16 inch
  - Other gases than natural gas
  - Pressure above 110 bar
  - Velocity above 36 m/s

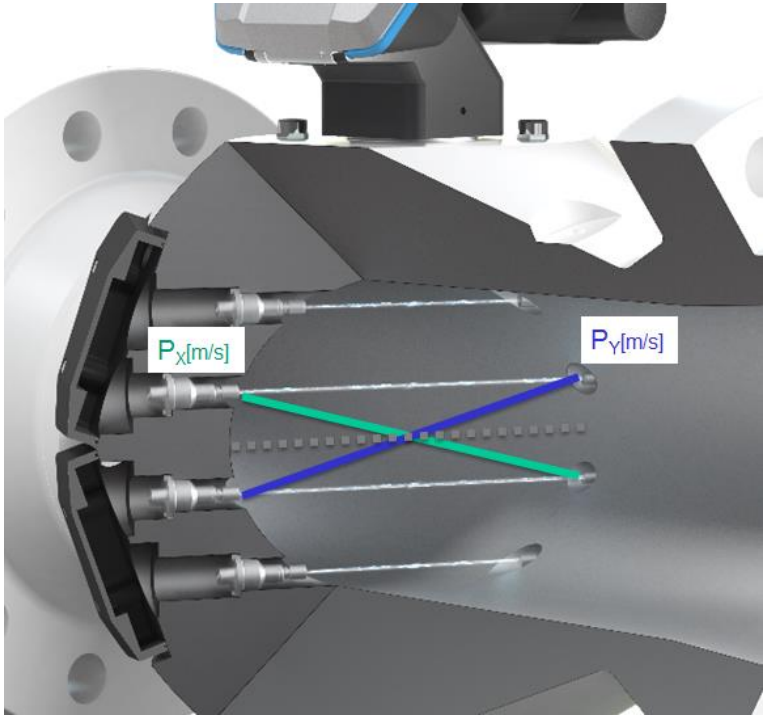

SICK
Sensor Intelligence.

North Sea FLOW Measurement Workshop

SICK AG

Daniel Heinig
Strategic Product Manger