33rd International North Sea Flow Measurement Workshop
20 – 23 October 2015, Norway

Realizing a class 1 Ultrasonic Gas Meter without HP calibration – An innovative approach as contribution to an economic upstream metering solution

Sebastian Stoof, SICK AG, Germany
Dr. Andreas Ehrlich, SICK AG, Germany
Dr. Volker Herrmann, SICK AG, Germany

---

1 Introduction

Diversification in gas production worldwide with an increasing production of unconventional natural gas, such as shale gas, leads to an increasing amount of gas wells. For the purpose of production control and well monitoring, the gas production from these wells is typically measured by a gas flow meter close to the wellhead or at the gathering station while the gas may contain liquids and contaminants due to limited gas treatment equipment on a wellhead skid. In addition, there is an urgent need for high rangeability, since the output of the well changes over time and is generally not predictable. Since the amount of wells significantly increase with shale gas and coal seam gas production, there is also a need for high availability and low maintenance equipment.

Gas metering points in this production environment are mainly covered by differential pressure meters driven by two major aspects – their robustness against liquids and their economic pricing. New technology gas meters like ultrasonic meters provide several advantages over differential pressure technologies such as a greater rangeability, strongly reduced pressure drop and extended diagnostics. However, ultrasonic meters usually mean a higher capital expenditure to the gas companies compared to differential pressure technology. This applies specifically for small diameter gas production pipelines. Even though the lower operational expenditures of ultrasonic meters may compensate for the higher initial invest, ultrasonic meters for gas production applications have not yet become accepted on a larger scale.

In order to overcome this issue, SICK presents an innovative approach for an ultrasonic gas production meter that provides high reliability, high rangeability and class 1 uncertainty in dry conditions (acc. ISO 17089-1) without need for an individual high pressure natural gas calibration. High pressure calibration with the related logistics usually means a 30-50% price adder for small size meters compared to the meter itself. The main factors that must be kept under control by the meter manufacturer are minimized manufacturing tolerances in order to ensure systematic low-pressure to high-pressure test transferability.

The paper describes the technical challenges that have been overcome in order to ensure a proper meter performance in high pressure natural gas without high pressure calibration. Both, low pressure and high pressure calibration lab results are presented as well as wet gas test results with water and oil components. Additional measures make the meter highly robust even against high LVF and provide a reliable liquid presence detection possibility by using the meter diagnostics. This results in an accurate (in dry-conditions) and economic upstream ultrasonic meter with large turn-down that indicates the presence of liquids (with reduced accuracy of readings) on a real time basis.

2 Initial considerations

Dynamic (wet) calibration has become a standard for Class 1 gas flow meters in order to ensure a high level of measurement accuracy in the field. ISO17089-1 recommends to choose calibration conditions such as pressure, temperature and flow rate similar to the designated operating conditions of the meter and to include upstream and downstream piping with flow conditioners whenever possible. [1]

The type of gas, pressure and temperature clearly have an effect on the flow profile inside ultrasonic meters and thus on the calibration result. Those effects are largely understood while influences from geometric meter tolerances, upstream piping characteristics and effects from flange connections have been less investigated. Usually these effects are neglected during flow calibration of ultrasonic meter packages. That's why there is a clear trend to calibrate meter packages in order to reduce the influencing factors that may cause a higher uncertainty of measurement in the final installation.

Ultrasonic meters that meet class 1 performance requirements, are mainly multipath ultrasonic meters with 3 or more paths for custody transfer applications. While meters for gas production applications have to be robust, provide highly available readings with good reliability and must be economic in CapEx and OpEx. Additionally, the gas stream in gas production applications may contain contaminants and liquids where 4-path meters have not shown an advantage in accuracy over dual-path meters. [2] Based on these considerations, a decision has been taken for a more economic dual-path concept that should meet Class 1 performance requirements. For this, it is necessary to understand the effects of changing operating conditions on the meter performance and to identify the main influencing factors to keep them down to an uncritical level of variation.

The main challenges for the realization of the project were:

- Create a dual-path meter with high accuracy and reproducibility
- Reduce flow profile variations from manufacturing tolerances and installation effects
- Develop a factory test procedures to guarantee for class 1 performance

3 Meter design

FLOWSIC600 has shown its accuracy and long-term stability in custody transfer and gas storage applications. Thus, sensor technology, electronics and manufacturing standards have been taken from FLOWSIC600 to ensure a thorough technical basis for the dual-path meter.

It has been shown that upstream piping conditions like steps and wall roughness do not have a significant effect on the accuracy of multipath custody ultrasonic flow meters [3, 4]. However, it can be assumed that their effect on dual path meters is more significant. This has been confirmed by the initial flow tests with a welded design for the initial upstream meter design.

Typical variations that increase the uncertainty of a dual-path ultrasonic meter are:

- Misalignments of flanges due to tolerances in flange connections
- Gaps between connection flanges
- Influences of weldings on pipe roundness
- Manufacturing tolerances of upstream piping

The influence of these variations on the flow profile and reproducibility of the dual-path meter are decreasing with increasing distance to the measurement section. Therefor the upstream meter section has been increased to a length of 10*nominal diameters. This increases the distance to flow disturbances from installation effects and allows the meter manufacturer to control the upstream pipe conditions close to the measurement section. The meter design as shown in figure 1 has also proven to be very beneficial in wet gas conditions. [5]

Figure 1: FLOWSIC600 DRU

Another measure to increase insensitivity of a dual-path meter to the specifics of an actual installation is to make the meter more robust against variations in the flow profile even in undisturbed conditions e.g. optimize the linearity of the meter with respect to Reynolds number. For symmetrical profiles in turbulent flows, changes are mainly caused by a change of the Reynolds number. Gätke [6] has defined a specific point in the flow profile, which shows minimal dependency on profile variations. This point is located in 0.4*radius distance to the pipe wall. (Figure 2) FLOWSIC600 DRU ultrasonic paths are positioned at this 0.4*radius position what makes the meter less affected by flow profile variations.

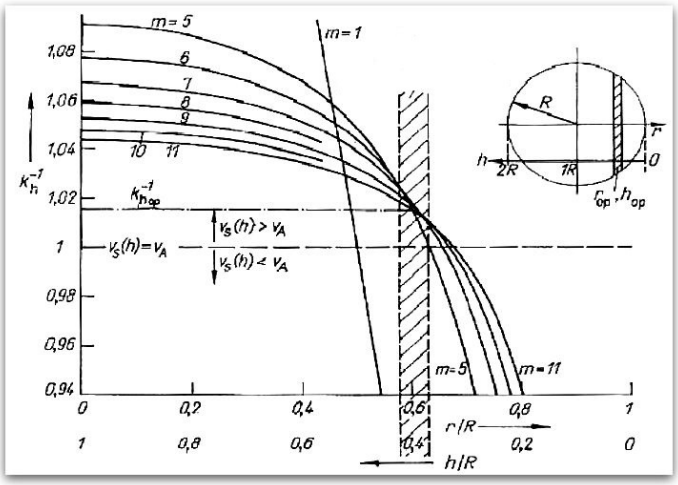

Figure 2: Calibration factor at turbulent flow [6]

A flow conditioner upstream of the meter is required to get a stable and symmetrical flow profile and ensure measurement performance also with typical perturbations like elbows in the upstream piping. The type of flow conditioner has been chosen under consideration of a proper flow straightening effect while the FC should ideally not limit the turn-down ratio of the ultrasonic meter. In several tests the CPA Type 55E has been found to provide a good compromise for this purpose. Typical meter installation setup is shown in figure 3.

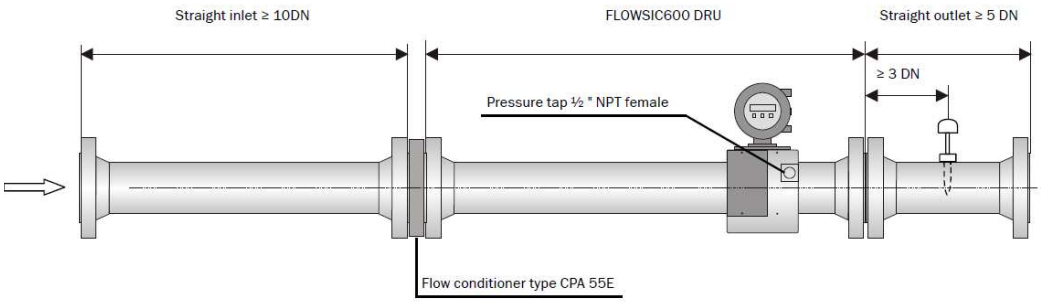

Figure 3: Meter installation setup

The first idea for realizing the meter design with integrated inlet section was a welding assembly made of inlet flange, pipe and measurement section. However, even after substantial improvements of the welding procedure the residual variations in inner diameter and axis offset were too high to create reproducible meter characteristics.

The ambient air flow test result of 8 meters with welded inlet section is shown in figure 4. The meter-to-meter scatter is too high resulting in the fact that most of the meters did not meet the accuracy requirements of ISO 17089-1 in ambient air. It is assumed, that a high variance of the baselines in low pressure will cause a larger deviation of the derived high pressure baselines.

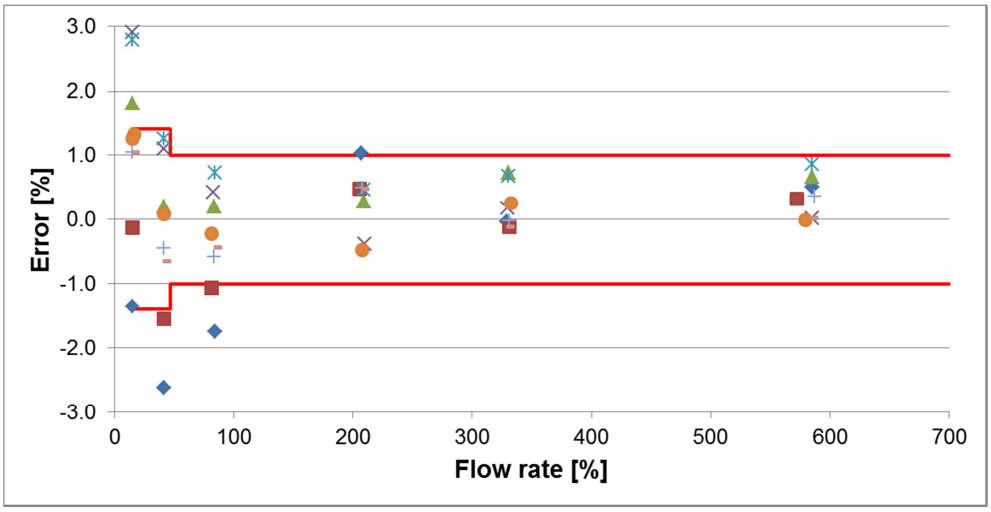

Figure 4: As-found results of 8 meters with welded meter design in ambient air flow test

The test result of the welded meters has shown that a main criterion for reduction of the scattering between different meters besides the transit-time uncertainty is a low level of geometric tolerances and minimal meter-to-meter variations by optimization of the manufacturing and testing procedures..

The meter body design was revised for a second approach. Each meter body was now manufactured from a steel bar in one machining step with utmost precision. Geometric dimensions of each meter body are measured precisely afterwards to prove compliance of tolerance criteria. Figure 5 shows the low level of variations at a sample of 25 machined meter bodies.

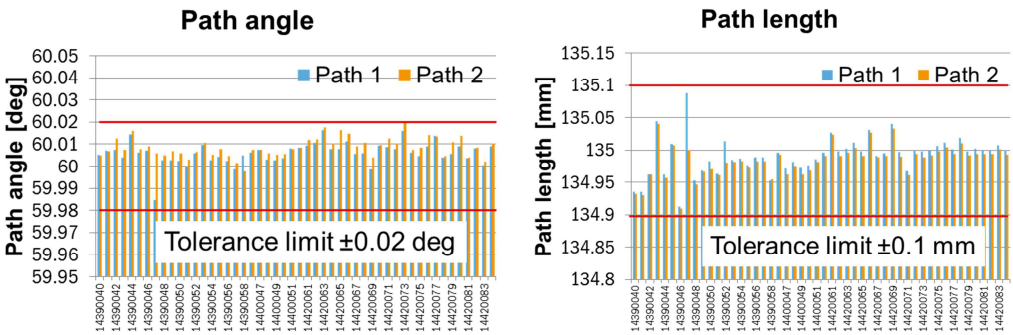

Figure 5: Tolerances in meter body geometry of the machined meter design

The combination of the integrated inlet piping with a low spread in geometric variations and the ideal positioning of the ultrasonic measurement paths ensure highly reproducible ambient air flow test results with high reproducibility and a very good linearity of the curves.

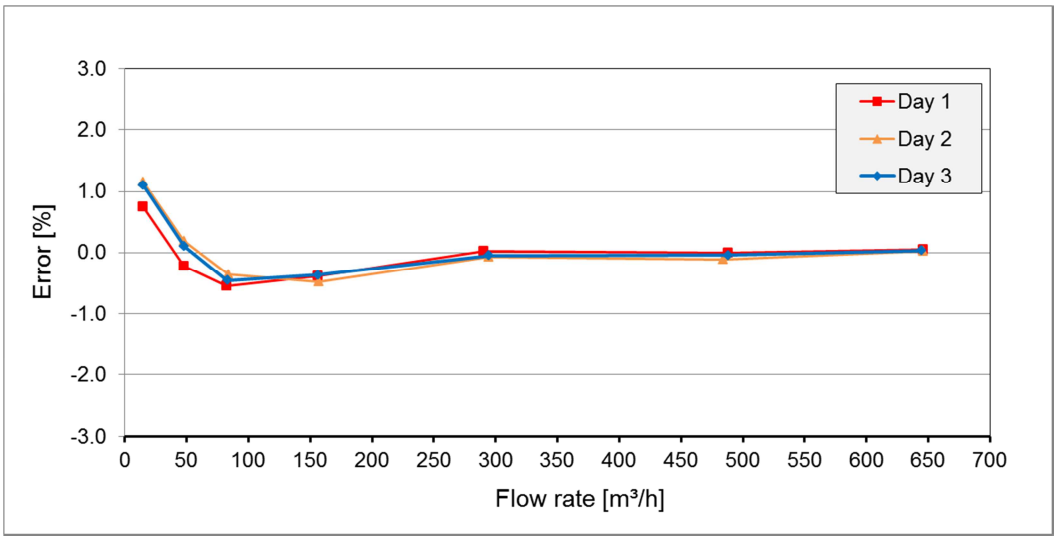

Figure 6: Reproducibility results of one sample meter in ambient air, 3 runs over 5 days

In figure 6 it is shown that the machined meters have a reproducibility of <0.35 % over the full flow range which exceeds the reproducibility requirements of ISO 17089-1:2011. The machined meter body design made out of a single bar has been approved for series production.

4 Test results

4.1 Ambient air tests

With the design aspects and manufacturing tolerances from chapter 3, a set of 25 meters have been tested in a 7-point flow test at SICKs ambient air flow lab. Figure 7 shows the as-found results of the test. It can be seen that the special design of the meters and the narrow tolerances result in meeting the Class 1 accuracy requirements with a dual-path meter.

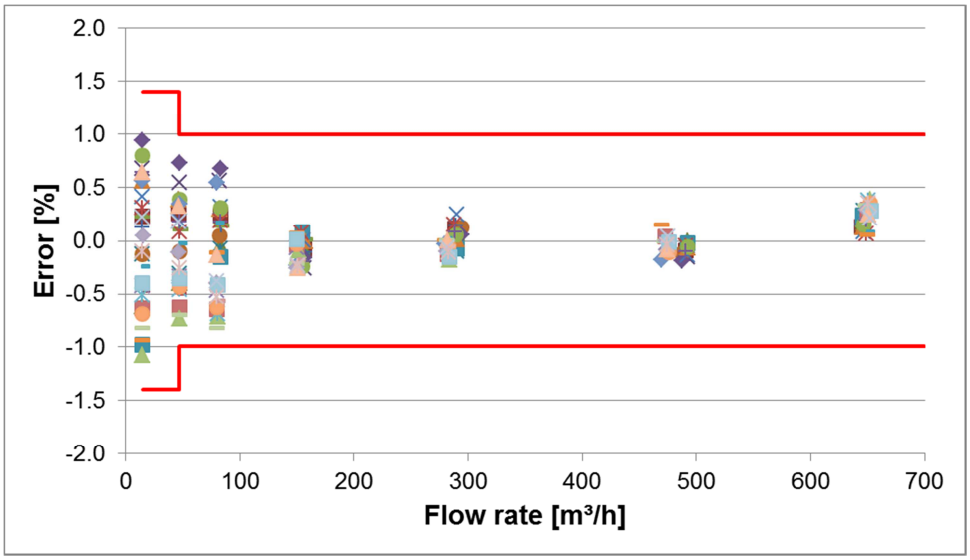

Figure 7: As-found results from 7-point ambient air flow test of 25 meters over flow rate

The meter-to-meter variations are less than ±0.5 % for flow rates above 100 m³/h. The meters show a very high linearity, in particular for higher flow rates. It can also be seen in figure 7 that the meter-to-meter variations are increasing with low flow rates. This can be explained by two effects:

First, Reynolds number is decreasing with decreasing flow velocity and cause a less stable flow profile by the lower inertial forces in the fluid. For example, the Reynolds number at Q_{min} is approx. 4500 which represent a "transition" flow which is not fully turbulent. The effect of Reynolds number on the uncertainty of measurement can be seen in figure 8 which shows the as-found error of the 25 meters over Re number.

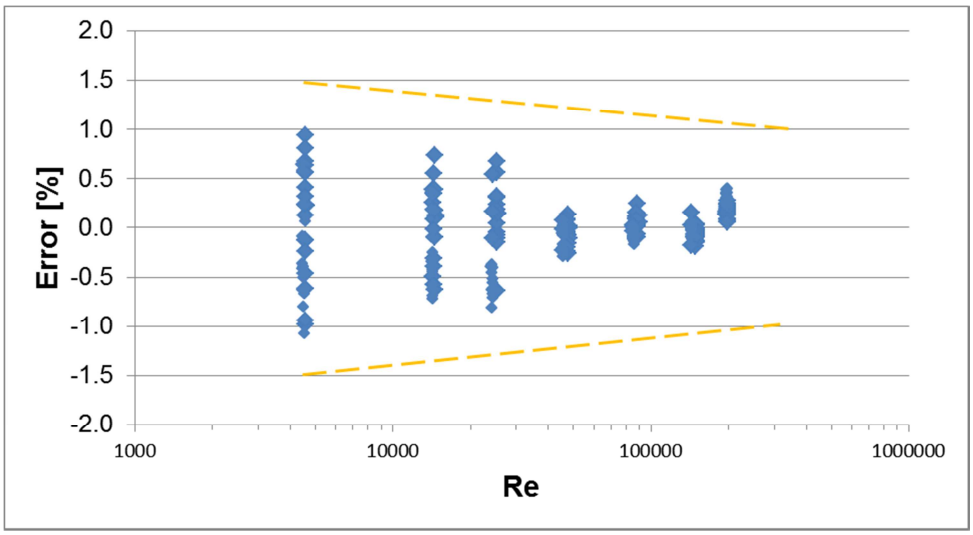

Figure 8: As-found results from 7-point ambient air flow test of 25 meters over Re number

Second, the total uncertainty of measurement of an ultrasonic flow meter is mainly defined by the error of the transit-time difference determination. While the uncertainty budget of all other influencing factors are independent from the flow rate, the uncertainty of transit time difference measurement is increasing at lower flow rates. (Figure 9)

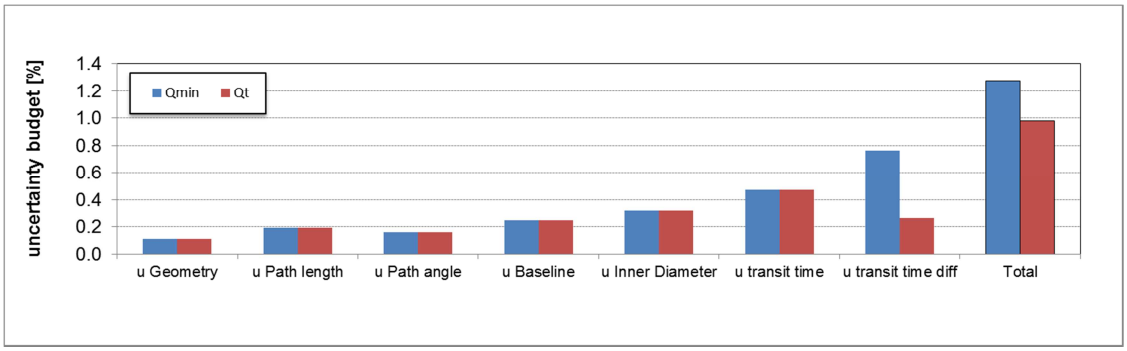

Figure 9: Uncertainty budget of dual-path USM with k=3

The results in figure 7 are encouraging, since the meter-to-meter variations and the linearity of the meters are good and improve with higher Reynolds numbers. Higher Reynolds numbers can be expected in the target operation conditions.

The meter electronics corrects for both, geometry changes of the meter body caused by temperature and pressure variations and for changes in the flow profile caused by a change of the Reynolds number. These corrections are made based on mathematic models and typically contain an uncertainty. In order to calculate the estimated total uncertainty caused by operation of the meter in operating conditions with high pressure natural gas instead of ambient air, the uncertainty budgets of the test labs and the uncertainty of the internal corrections have to be considered. All single uncertainties are normally distributed and considered with 95% confidence level (k=2):

$$u_{trans} = \sqrt{{u_{test\ lab,lp}}^2 + {u_{test\ lab,hp}}^2 + {u_{corr,geom}}^2 + {u_{corr,Re}}^2} \leq 0{,}32\ \%\ (k = 2)$$

with single uncertainties considered with:

$u_{test\ lab,lp} \leq 0{,}2\%$ (Test lab uncertainty of ambient air test stand)

$u_{test\ lab,hp} \leq 0{,}2\%$ (Typical harmonized lab uncertainty of high pressure test labs)

$u_{corr,geom} \leq 0{,}1\%$ (Uncertainty of geometric correction function [7])

$u_{corr,Re} \leq 0{,}1\%$ (Uncertainty of Reynolds number correction)

The ambient air test results give the required margin for the additional uncertainty of 0.32 % when the increasing Reynolds number in high pressure is considered. Thus, it can be expected that the meter will stay within the error limits even in high pressure natural gas.

4.2 High pressure natural gas tests

In order to answer that question, 10 out of the 25 meters have been tested at traceable European high pressure natural gas test benches. Tests have been performed at two different test benches at 4barg and 50 barg. 4 barg have been chosen to verify the flowmeter characteristics at slightly elevated pressures from ambient while the 50 barg tests represent a typical operation pressure of the meter. Figure 10 shows the as-found results of the tests in high pressure natural gas.

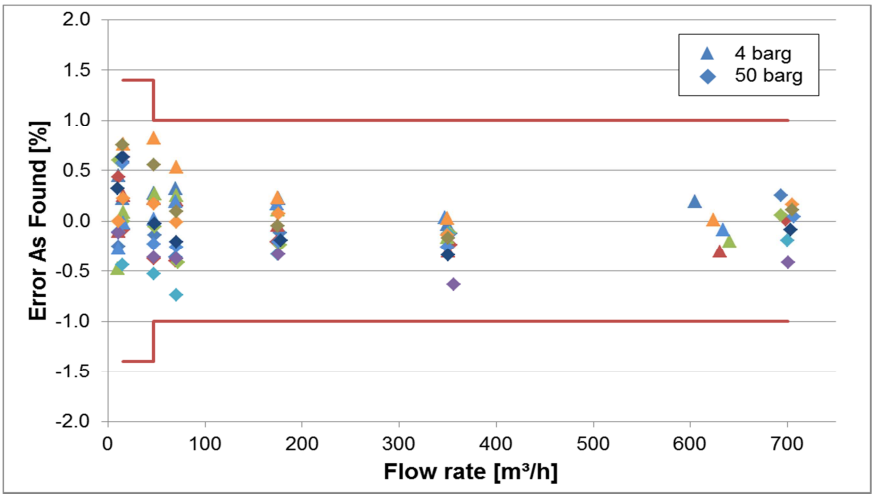

Figure 10: As-Found results of 10 meters in high pressure natural gas

The results confirm the high linearity of the meter characteristics and are within the expected additional uncertainty of ≤ 0.34 %. All test results are well within the Class 1 performance requirements of ISO 17089-1. The meter to meter variations are within the expected range. Significant differences between the 4bar tests and the 50 bar tests could not be found.

If the test results are plotted over Reynolds number (figure 11), it can be found that the spread of As-found errors is further declining with increasing Reynolds numbers. No systematic bias can be found. It can be assumed that the spread of error will converge to a level of approx. ± 0.5 % which may represent the physical limitations in uncertainty of a dual path meter.

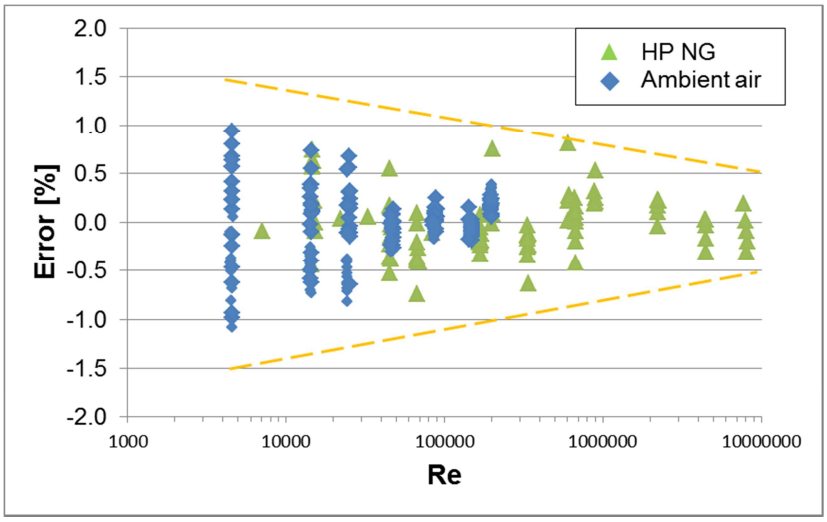

Figure 11: Test results from ambient air and high pressure natural gas over Re number

4.2 Quality assurance

The test results of chapter 4.1 and 4.2 show that a dual path ultrasonic meter can provide high accuracy in operating conditions even if it is not calibrated in similar conditions. The key aspects that must be ensured for that by the meter manufacturer are:

- High linearity of the meter characteristic over the whole flow range
- Minimum meter-to-meter variations in geometric parameters
- Highly repeatable and reproducible ultrasonic measurements also in low flow conditions

State-of-the art transducer technology and advanced meter electronics with compensation for geometric shifts caused by temperature and pressure and for changes in the flow profile caused by changes of the Reynolds number in the gas are clearly a basic precondition. However, it has been found that even minor deviations in manufacturing tolerances or the manufacturing process can significantly influence the meter performance. Due to that, SICK has implemented a quality assurance concept that not only monitors the tolerances in each manufacturing step, but finally evaluates each meter characteristic in a 5-point ambient air flow test. In addition, random samples from the series meter production are validated on high pressure natural gas test benches in order to detect drifts in series production.

5 Ensuring production environment robustness

Another vital aspect for a meter for gathering stations and gas processing plants is a high robustness against liquids and pollutants that may occur in the gas stream. Several concepts for ultrasonic meters exist to provide a higher tolerance in polluted gas streams. SICK has tested and realized numerous meters in upstream applications also with different concepts over the past 5 years. [5] Based on this experience and the valuable and trustful cooperation with our customers SICK has found a beneficial combination of meter design aspects and diagnostic functions for services with potentially wet gas.

The ultrasonic transducers in the meter have been improved for wet gas service. The sensors are made of titanium, hermetically sealed and protected with a special metallic encapsulation against moisture. They are mounted in retracted position with enlarged sensor pockets (flush-mounted) so that contaminants cannot harm or damage the sensors and liquids can easily drain from the sensor pockets. (Figure 12) Even in the unlikely event of damage to the sensor head by solids in the gas stream, constructive measures prevent any process leakage. The pressure bearing feedthrough (red marking in figure 12) from the sensor to the environment is located in the back part of the sensor, so that even if the sensor head would get damaged, no safety risk or leakage can occur.

5.1 Liquid indication

It has been shown that ultrasonic meters are well capable for use even in gas production applications with wet gas and that the diagnostic values provide valuable information that may indicate the presence of liquids. [2] Since ultrasonic meters as well as orifice meters tend to over-register with the presence of liquids, signalizing this presence can be a valuable diagnostic feature. Thus, the diagnostic data from wet gas tests with the current meter design have been analyzed in detail and an idea for a liquid detection algorithm has been developed.

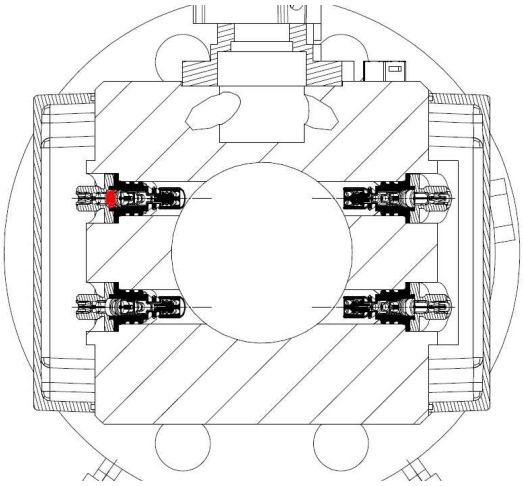

Figure 12: Sensor positioning inside the meter

The simplified detection algorithm is shown in figure 13. The algorithm uses standard diagnostic parameters such as Speed of Sound and Turbulence in order to identify a potential presence of wet gas with LVF of typically >0.5%. This is typically the amount of LVF where significant over-registering of a meter starts. In a next step, the algorithm has been validated during a Joint-Industry-Project (JIP) at DNV-GL in the Netherlands in 2014 where SICK participated with the FLOWSIC600 DRU meter concept. It could be proven that the algorithm detects liquid volume fractions of 0.5% or more with a confidence level of >95% in

laboratory conditions. This liquid detection algorithm has now been implemented into the FLOWSIC600 DRU in order to gain field experience and real application data with the new diagnostic feature that can provide valuable information about potential liquids in the gas stream. It must be pointed out, that the liquid indication diagnosis is not used to compensate for over-reading of the meter caused by liquids in the gas.

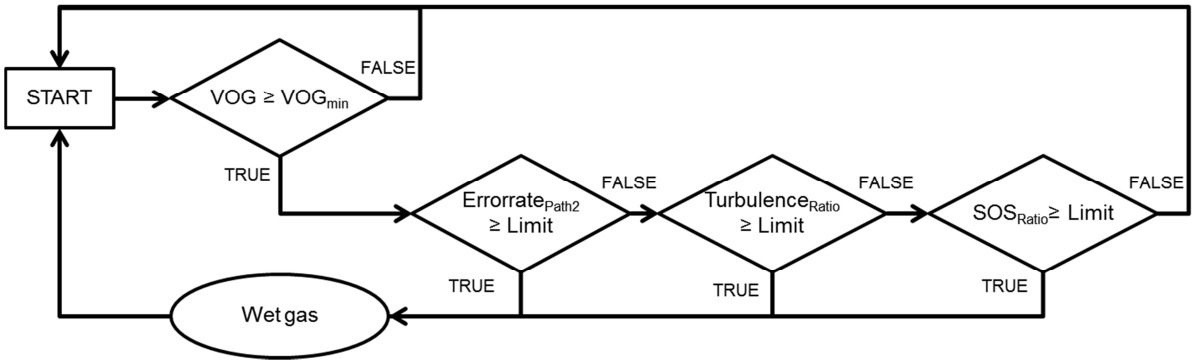

Figure 13: Simplified algorithm of Liquid Indication Diagnosis by SICK

5.2 Wet gas test results

Wet gas tests at different test facilities as well as field experience in numerous wellhead applications contributed to increase SICKs knowledge of wet gas measurement over the last 10 years. The latest part in that was the Joint Industry Project "US meters in wet gas applications" by DNV-GL [8], where the meter has been tested in two-phase flows with the liquid phase being water, oil or a mixture of water and oil. Variations in Froude number, Lockhart-Martinelli-Parameter and Density Ratio have been tested in more than 200 test points. The results are in line with the results from former tests with the meter concept.

Figure 14 shows a ramp-up/ramp-down test with increasing Lockhart-Martinelli-Parameter (X_{LM}) indicating the "wetness" of the gas. FLOWSIC600 DRU continuously measured over the full test where at the maximum of X_{LM}=0.9, an equivalent of 13.2% LVF has been reached. It can be seen also, that the over-registering of the meter in wet gas can reach up to 150% which shows the big importance of identification of those flow conditions. It can be seen at the beginning and end of the ramp that the meter readings are within an acceptable allocation accuracy range for $X_{LM} < 0.1$.

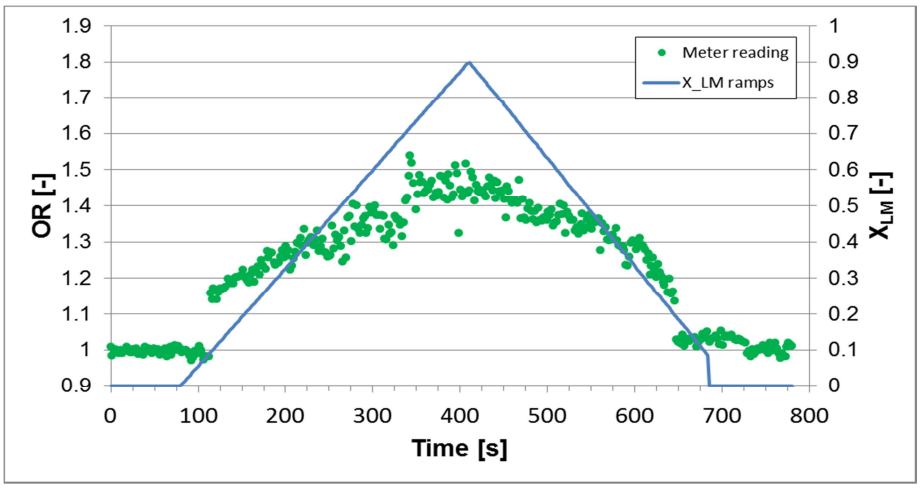

Figure 14: Overreading of FLOWSIC600 DRU in wet gas flow ramp-up/ramp-down test

During the blind test, the manufacturers were asked to label the measurement result based on the diagnostic informations from the meter with a traffic light system. SICK decided to set a "yellow" status for each test point were the diagnostic data indicated, that the meter readings may be inaccurate. Figure 15 shows the results over X_{LM} and Froude number Fr_G and it can be seen that most of the green labeled test points remain close to the actual gas reference flow rate and show a low uncertainty of typically <2.5%. For test points with higher liquid loads that caused the meter to over-register, this was signalized by the diagnostic data in most of the cases. It is also true that in some test points the meter over-registered while the meter diagnostics did not indicate this and vice versa. SICK did not make pre-tests at the test facility so that the data of the JIP become higly beneficial since we were able to optimize the performance of a dual-path meter in wet gas based on this.

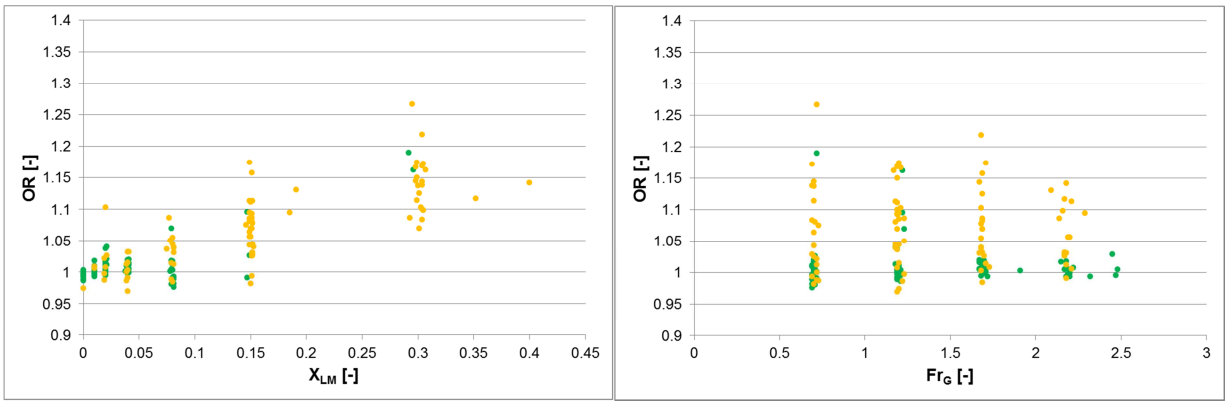

Figure 15: Wet gas test results over X_{LM} and Fr_G during test

After slight modifications in the evaluation method, we re-calculated the test points and improved the result by eliminating the outliers. Figure 16 shows the result after the optimization in the evaluation method. Obviously, it is easy to adapt meter diagnostics in post-processing when the desired result is known. However we are convinced that the meter performance and meter diagnostics will improve with the optimized diagnosis also in the field. Results from various ongoing field installations will be presented soon.

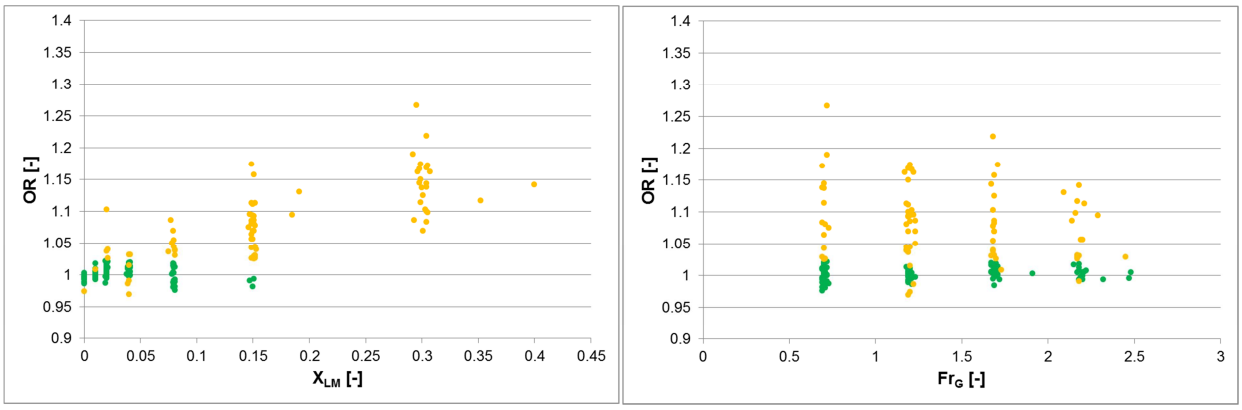

Figure 16: Wet gas test results over X_{LM} and Fr_G after improvements

Even though some test conditions (e.g. with mist flow) have caused the lower ultrasonic path to fail because liquids were blocking it, the path recovered rapidly when the test conditions improved. Before and after the wet gas tests, the meters baseline has been determined. No change in accuracy or stability was observed.

Finally, the results from the JIP Project have verified the meters capability to

- withstand wet gas flow conditions in mixtures with water and oil.
- provide highly accurate readings in dry gas before and after the test.
- provide readings with acceptable accuracy for allocation metering up to 0.5% LVF of the gas stream.
- provide continuous readings even with heavy liquid loads
- reliably detect the presence of liquids that affect the meters readings

6 Conclusion

The use of ultrasonic meters in gas production applications, at gathering stations or in gas processing plants is not limited by the ultrasonic technology itself.

It has been shown that the combination of ultrasonic technology, a special meter design, low manufacturing tolerances and minimal meter-to-meter variations allow transferring ambient air flow test results to high pressure natural gas. Understanding the key influencing factors on the meter characteristic and keeping them in an uncritical level of variation is vital in order to meet Class 1 performance requirements.

Another vital requirement to meters for upstream application is to be robust against liquids and contaminants and to provide reliable readings under all circumstances. It has been shown by wet gas test results from former tests and the Joint-Industry-Project of DNV-GL that several measures in sensor positioning and transducer design allow to provide continuous readings in wet gas conditions up to a X_{LM} of 0.9! Moreover, it could be shown that for $X_{LM} < 0.1$, which can be typically expected after the first stage of separation, the meter provides reliable readings with an accuracy which is usually acceptable for allocation purposes.

Based on wet gas tests and field experience from upstream applications, a new diagnostic feature has been presented that indicates the presence of liquids in the gas stream which may cause the meter to over-register significantly. In the lab tests, LVF of >0.5% could be reliably detected.The reliability of the new diagnostic feature of liquid detection and possible side effects on it will be investigated in various ongoing field applications.

It can be expected that the installed base of ultrasonic meters in gas production applications will increase in the future. At least since the low oil prices may force operators to put their focus more on the operational cost of wellhead equipment. Here, the virtually maintenance-free ultrasonic meters provide thorough advantages also by their high turn-down ratio. Precondition for that is that ultrasonic meters show no significant disadvantage compared to traditional meters in reliability, availability and cost.

References

[1] Internation Standard ISO 17089-1:2010. *"Measurement of fluid flow in closed conduits – Ultrasonic meters for gas. Part 1: Meters for custody transfer and allocation"*. First Edition 2010-11-15.

[2] Jakschik A., Wenzel J., Warmenhoven T., Horst T. *"Accuracy and long-term stability of ultrasonic gas meters at varying operating pressures and different liquid loadings – field experience."*. North Sea Flow Measurement Workshop, 2012, Norway.

[3] Karnik U., Geerligs J. *"Effect of steps and roughness on Multi-path ultrasonic meters"*. International Symposium on Fluid Flow Measurement, 2011, USA.

[4] Horst T., Jakschik A., Dietz T., Riezebos H., Herrmann V. *"Considerations on the influence of deposits or changes in wall roughness on the validity of the calibration and long term accuracy of ultrasonic gas flow* meters*"*. North Sea Flow Measurement Workshop, 2011, UK.

[5] Lansing J., Dietz T., Steven R. "*Wet Gas Test Comparison Results of Orifice Metering Relative to Gas Ultrasonic Metering"*. AGA Operations Conference, 2012, USA.

[6] Gätke, Johann. *"Akustische Strömungs- und Durchflussmessung"*. Rostock: Wiley-VCH, 1991.

[7] Herrmann V., Ehrlich A., Dietz T. "*Multipath Ultrasonic Gas Flow Meter – How can Design Iimprovements reduce total Measurement Uncertainty?"*. North Sea Flow Measurement Workshop, 2004, Norway.

[8] van Putten, D., Riezebos, H. *"First Results of the JIP on Ultrasonic Meters in Wet Gas Applications"*. European Flow Measurement Workshop, 2015, Netherlands