Lundin Edvard Grieg and Brynhild – Implementation of Topside and Subsea Multiphase Meters, Collaboration for Success

Author:
Geir Kristensen, Roxar, Emerson Automation Solutions

Co-authors:
Ragnar Heksem, Lundin
Søren Forne, Roxar, Emerson Automation Solutions

1. Overview

The purpose of this paper is to provide a practical example for how maximum performance in operation of a multiphase metering system can be achieved.

This is demonstrated by describing the ongoing collaboration between Lundin and Emerson/Roxar, and by analysing how this collaboration model works in the follow up of Roxar multiphase meters (MPFM) installed at Brynhild and Edvard Grieg fields in the North Sea. Brief descriptions of the application, and of the applied measurement technology, will be provided as background for the reader, the focus of this paper will be on the collaboration model. We will look at how this cooperation optimises the meter performance and return on investments? Are opportunities for improvements uncovered during the period of cooperation? What are the main benefits for the involved parties?

2. The Operator and The Field

Edvard Grieg

The Edvard Grieg field is part of the PL338 on the Utsira High in Norwegian sector of the North Sea, about 180 km west of Stavanger. The field was discovered in 2007 with Lundin Norway's very first drilled exploration well, and is estimated to contain 195 million barrels of oil equivalents (gross 2P reserves). Lundin Norway is the operator of PL338 with a 65 percent working interest. The licence partners are OMV Norge with 20 percent and Wintershall Norge with 15 percent. Production start-up on Edvard Grieg was in November 2015.

Thirteen Roxar MPFM 2600 topside multiphase meters are installed on the Edvard Grieg platform. Two of these meters are placed on the import lines coming from the Ivar Aasen platform. So far, nine of these meters are set in operation. The rest of the meters will be set in operation as soon as the remaining wells are started up.

Ivar Aasen, located on the neighbouring field, is developed as a stand-alone platform for partial processing, water conditioning and injection, with transfer of the multiphase hydrocarbon mixture through two pipelines to the Edvard Grieg platform for final processing and export. Ivar Aasen has several licensees shared between Aker BP, Statoil and Lundin Norway.

All meters installed at Edvard Grieg have sizes internal diameter (ID) of 132mm with meter body size at 8 inches, while the two Ivar Aasen meters have ID of 173mm with meter body size at 10 inches.

Brynhild

The Brynhild field part of the PL148 is situated in the southern part of the North Sea, about 55 km northwest from the Ula field and 38 km north of the Pierce field (UK). Lundin Norway is the operator for PL148. The Brynhild field produced first oil in December 2014 and is Lundin Norway's first field development as an operator.

Following the divestment of 39 percent working interest in the field to existing partner CapeOmega (expected to receive customary government approval in the fourth quarter of 2017), Lundin Norway will have a working interest of 51 percent in the Brynhild field.

The field has been developed as a subsea tie-back to the Haewene Brim FPSO on the Pierce field in the UK sector. The Subsea Production System (SPS) consists of a Riser Base Manifold (RBM) installed at the production ship, as well as an integrated subsea template/manifold system which has been installed on Brynhild.

The Brynhild subsea production system consists of four horizontal x-mas trees, subsea control components, a multi-phase flow meter module (MPFM), an integrated overpressure protection system (IOPPS) and umbilicals.

One Roxar MPFM 1900VI subsea multiphase meter is installed at Brynhild. The meter in operation is located on the Brynhild Manifold. One meter is installed on the Pierce inlet at the Riser Base Manifold (RBM) for potential field allocation purposes. This Pierce meter has not yet been set into operation.

3. Roxar Multiphase Meters Used at The Field

Edvard Grieg

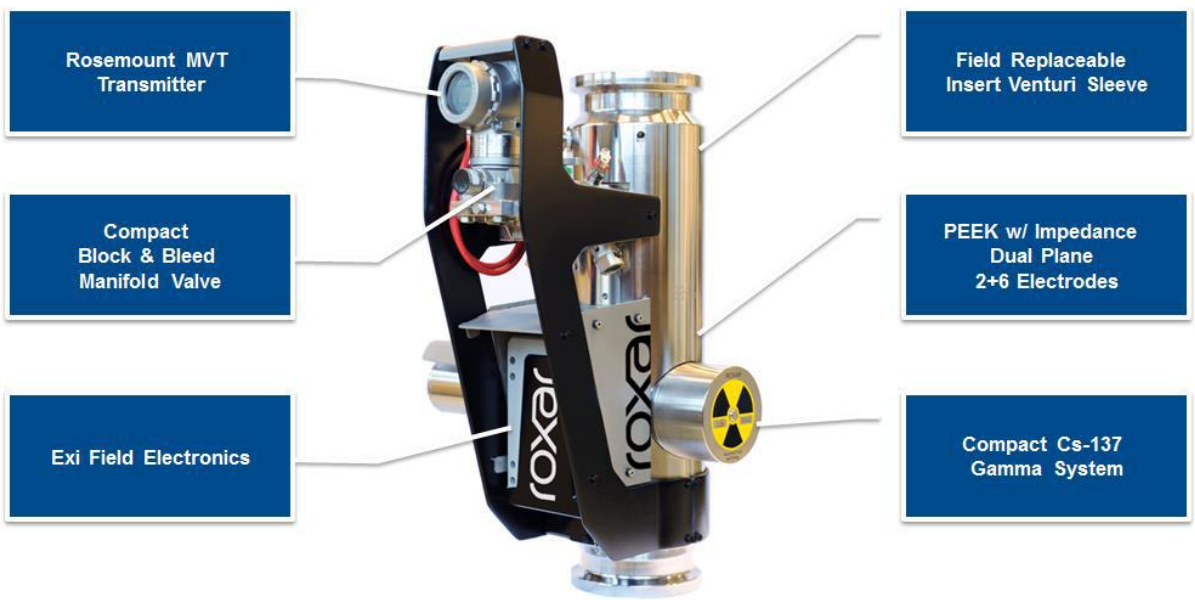

Figure 1: Roxar MPFM 2600 main components

The Roxar MPFM 2600 multiphase meter applies fractional measurements using electrical impedance measurements, in combination with a single high-energy gamma for density measurements. Each multiphase meter installed at Edvard Grieg has its own Roxar Multiphase Salinity System (RMSS) installed. Salinity system is used for direct, continuous measurement of water conductivity in multiphase flow.

Figure 2: Roxar Multiphase Salinity System (RMSS)

Brynhild

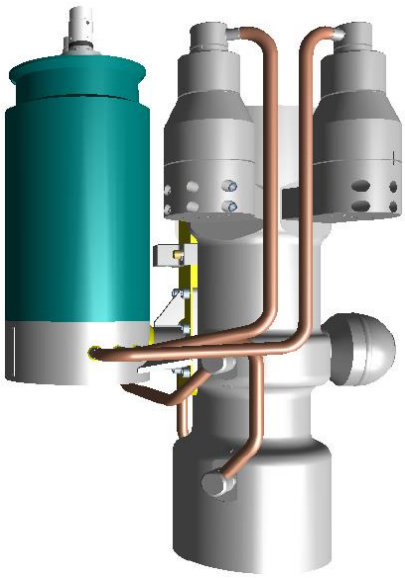

Figure 3: Roxar MPFM 1900VI subsea multiphase meter

The main difference between the topside and subsea MPFM is the redundancy. The Roxar MPFM 1900VI measurement system consists:

- Venturi meter with dual dP transmitters
- Dual capacitance sensor and sensor electronics used to determine the permittivity and velocity of the flow;

- Dual inductive sensor and sensor electronics used to determine the conductivity of the flow;
- Gamma densitometer (non-gamma software is used as backup) to measure the density of the flow;
- Dual pressure and temperature transmitters and dual computers to carry out the analysis of the data.

The figure below shows how the Brynhild multiphase meters are connected to topside via Aker Subsea Control Modules.

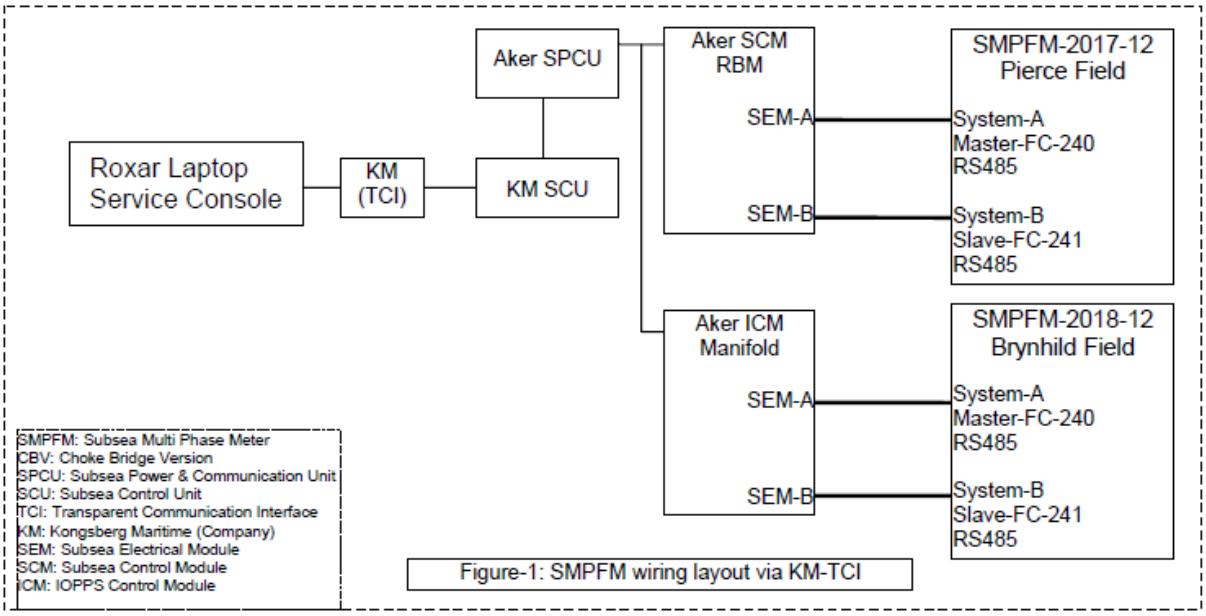

Figure 4: Schematics showing how connection is made to the Lundin multiphase meters

4. Measurement Challenges to Consider

Topside Versus Subsea Meters

Subsea multiphase meters are normally installed close to the wellhead and have therefore relatively stable flow conditions. For topside installations, long pipelines between the wellhead and the platform where the MPFM is installed are common. Long horizontal pipelines combined with low velocity can create severe slugging, that will make the measurement conditions for the MFPM more challenging. For all Edvard Grieg wells the wellhead is placed on the platform, and therefore the multiphase meters are seeing very stable flow conditions. In contrast to this, the Ivar Aasen import meters installed at Edvard Grieg are connected to flow lines located a few kilometres away. Despite this, the measurement conditions for these two meters are relatively stable.

Multiple or Single Well Applications

Eleven Edvard Grieg meters are used for single well applications. Two meters are used for multiple well applications. Flow coming from the import lines from Ivar Aasen platform contain hydrocarbons from several wells. The MPFM in operation at Brynhild is used for both multiple as single well applications. As can be seen in Figure 5; sometimes only one well is routed through the MPFM and sometimes more wells are added.

Allocation

Since the interests are shared between different owners, there is a high focus on optimal measurements. Any deviation in the MPFM measurements will affect all partners to a greater or lesser extent. Brynhild MPFM is used for field allocation, however this is not the case at Edvard Grieg. Even if the field allocation is not used at Edvard Grieg, there is a high focus on the well allocation. This is to ensure that the flow of each well is optimally measured by the MPFM.

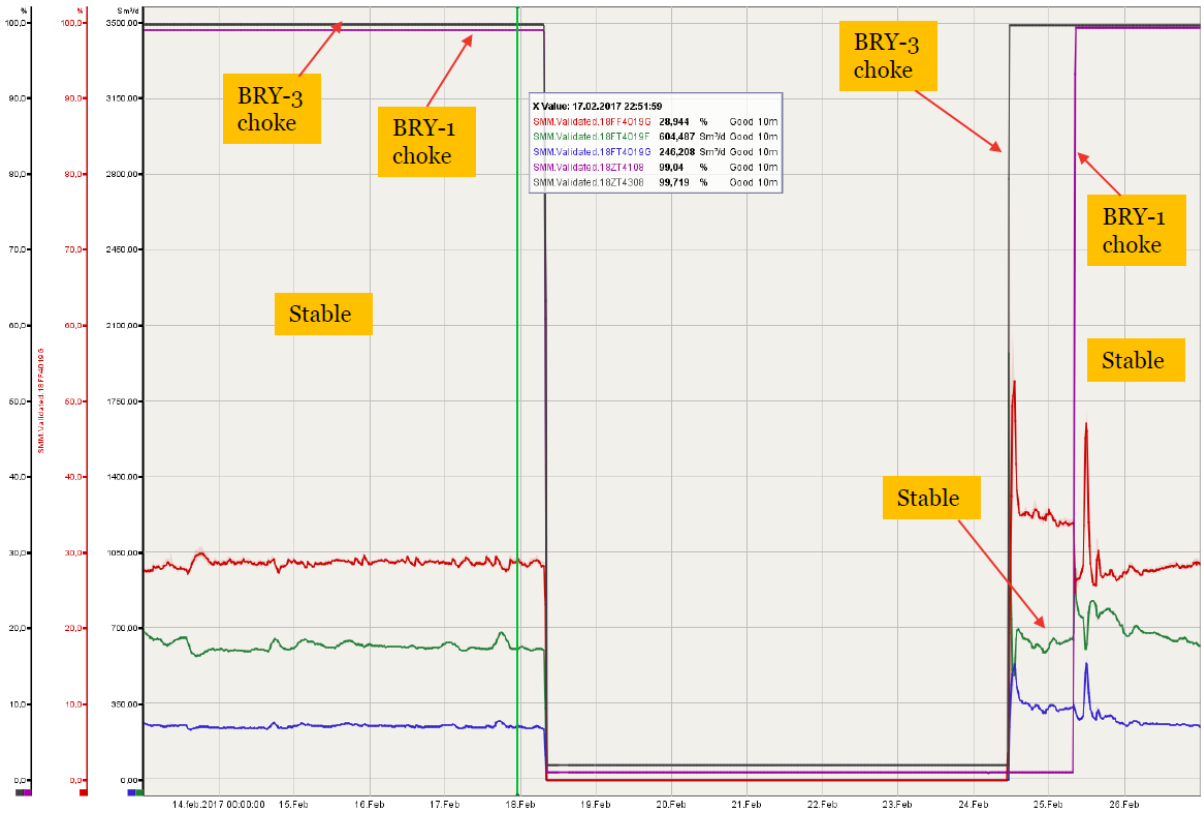

Figure 5: Choke position indicates what wells are routed though the Brynhild MPFM

5. Client Support and Service

Client support and service are delivered in several different ways and will be described in more detail in the sections below.

MPFM Measurement Evaluation Reporting

Reports are issued regularly that show the current status of MPFM, which include, but are not limited to:

- Analysis/diagnosis of the equipment;
- Hardware and software performance of MPFM;
- Functional checks of the MPFM (parameter files, gamma calibration etc.);
- Data analysis (average GVF, WLR, Actual, Oil, Water and gas rates etc.);

- If available, validation of measurement results against other references, such as total production, historical data trends or general field conditions knowledge, such as water and oil production rates;
- Conclusions and follow-up recommendations meter per meter.

Measurement Performance Evaluation Reports and data analysis are used to evaluate the performance of the multiphase meters at Brynhild and Edvard Grieg. Reports are issued for both installations as requested by the customer.

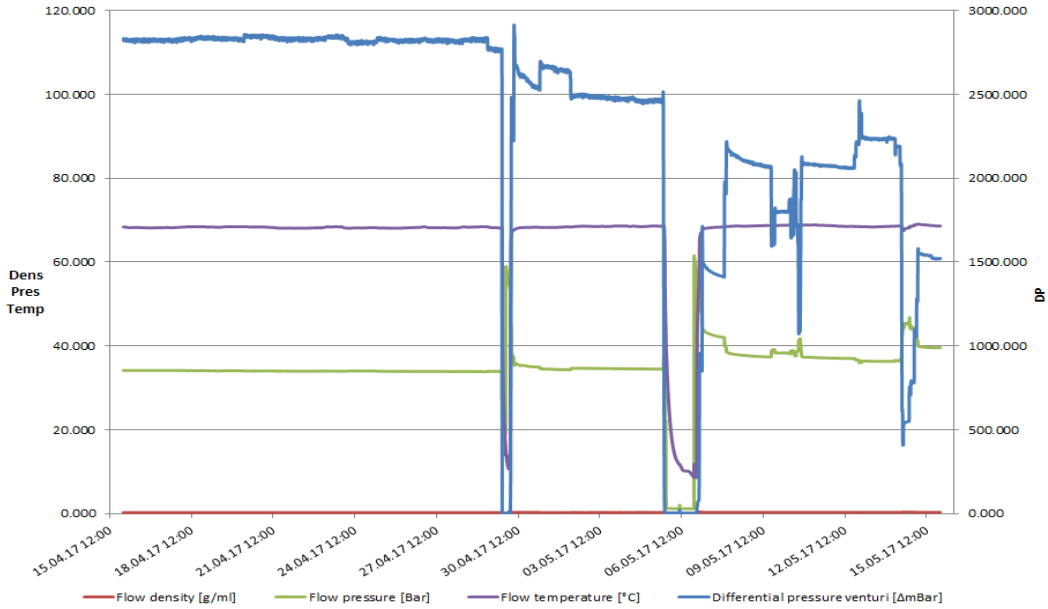

Figure 6: Example – Graphs showing different MPFM sensor readings

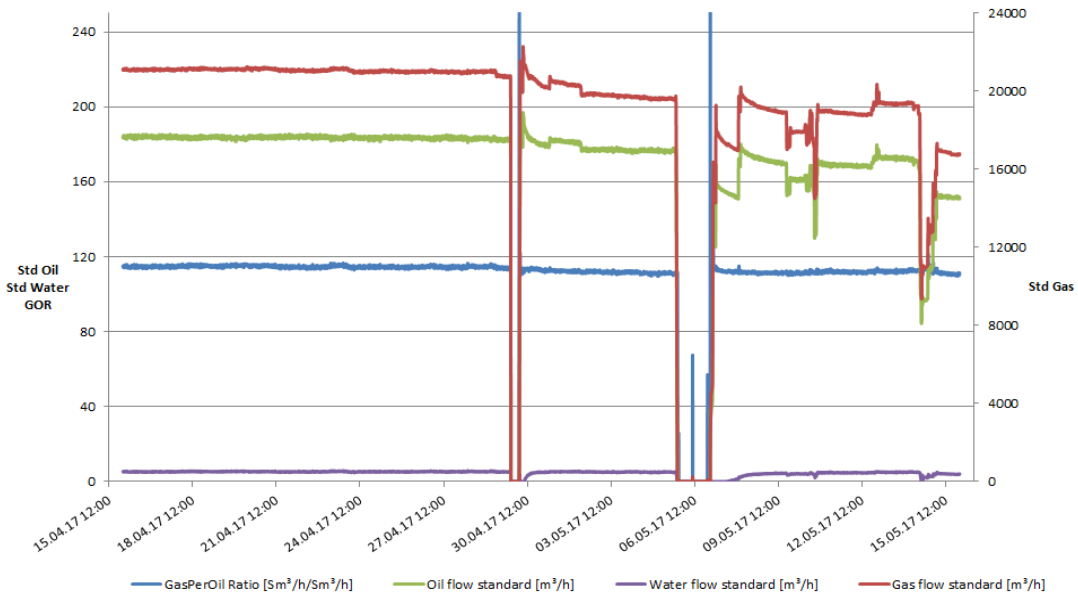

Figure 7: Example – Graphs showing flow rates and GOR

Remote Access

To be able to access meter data, Lundin has granted Roxar remote access to connect to both Brynhild and Edvard Grieg multiphase meters. Fieldwatch and PI access means Emerson/Roxar is able to rapidly check the performance and technical status of the meters without going offshore. This is not only access to flow measurement, but also raw data of various character.

Fieldwatch

- Roxar Fieldwatch is a modular and scalable software suite that enables multiple Roxar sensors and instruments to share a common software system. The advanced solution collects, monitors, visualizes and analyses data. The software is installed on a server at Edvard Grieg, and via Shield connection Roxar has remote access to this server.

- The software provides overview over all Roxar products installed at Edvard Grieg, not only the multiphase meters. In addition to multiphase meters, Roxar Flow Assurance products, such as acoustic sand detectors and erosion probes are installed.

- Lundin PI and DCS are collecting all MPFM (and other Roxar measurement) data through the Fieldwatch data acquisition tool, so it is important that the Fieldwatch server is continuously running. Fieldwatch is logging all data coming from the Roxar instruments and automatically making recovery backups on a regular basis. If a Fieldwatch sever crash potentially should happen, it is then possible to do a full recovery using the latest backup.

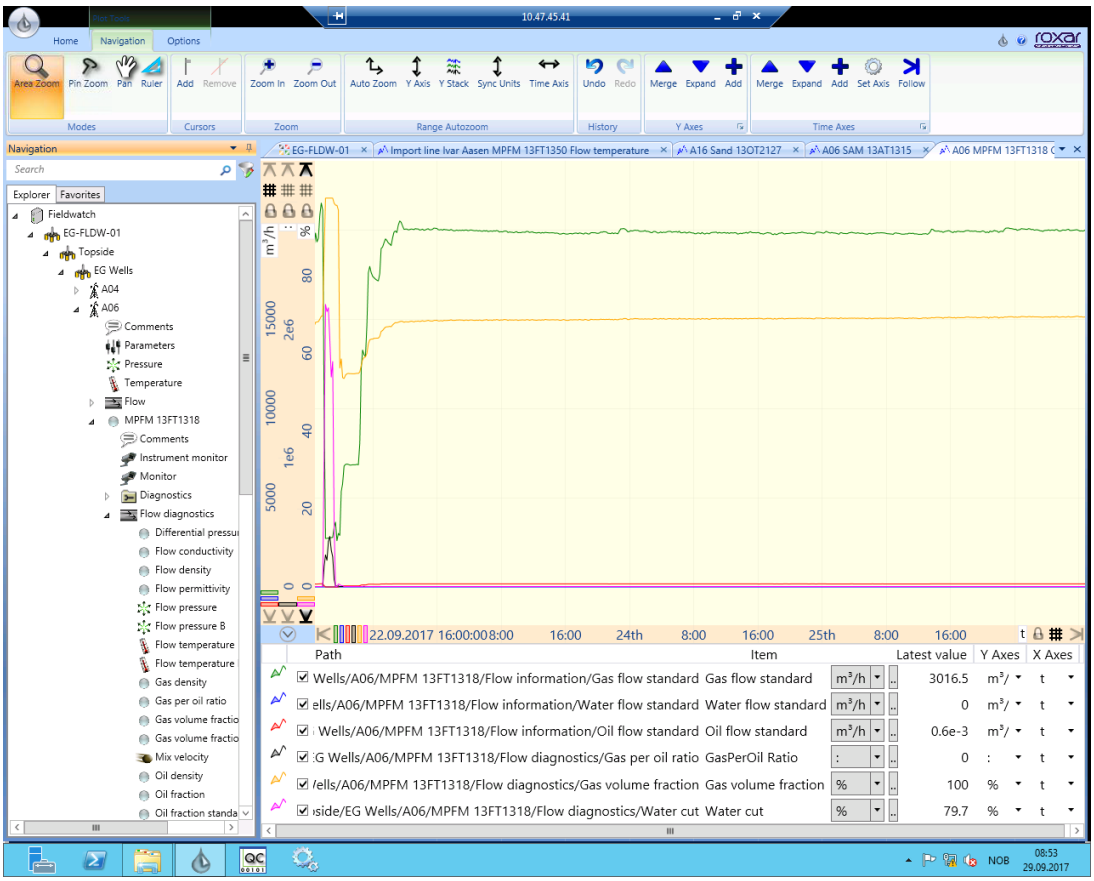

Figure 8: Fieldwatch graphical user interface

- For the Edvard Grieg performance evaluation reports, Fieldwatch is used to plot and analyse data over a defined period. In addition, measurement and sensor data are downloaded in csv-format for plotting in Excel, these graphs are then used in the monthly reports issued to Lundin.

Edvard Grieg data is made available to Emerson through:

- Remote access via Shield interface to the Roxar Fieldwatch server offshore. Through the server it is possible to connect to the meters using the MPFM service console. This makes it possible to update calibration factors, PTV-tables etc. into the meter remotely.
- PI system access through Lundin Citrix.

Brynhild data is made available to Emerson through:

- PI system access through Lundin Citrix.

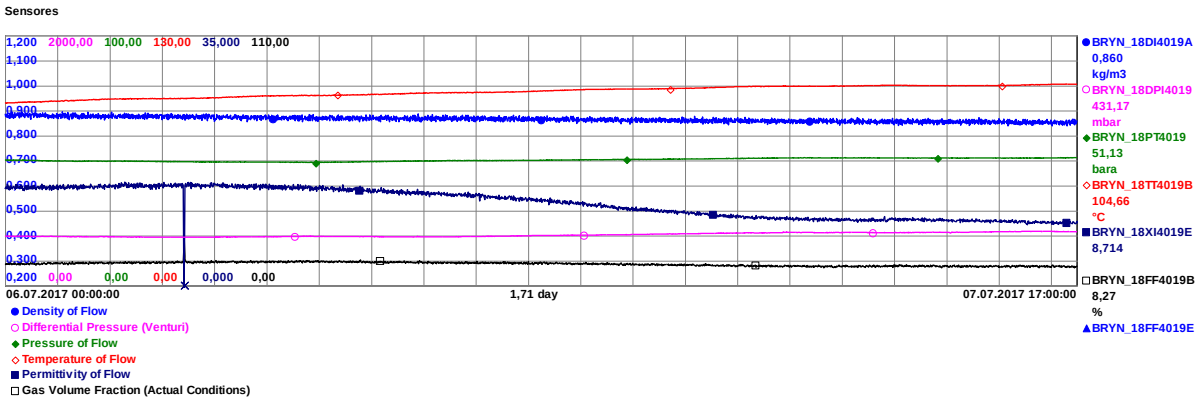

Figure 9: Example – Brynhild MPFM sensor data retrieved from Lundin PI

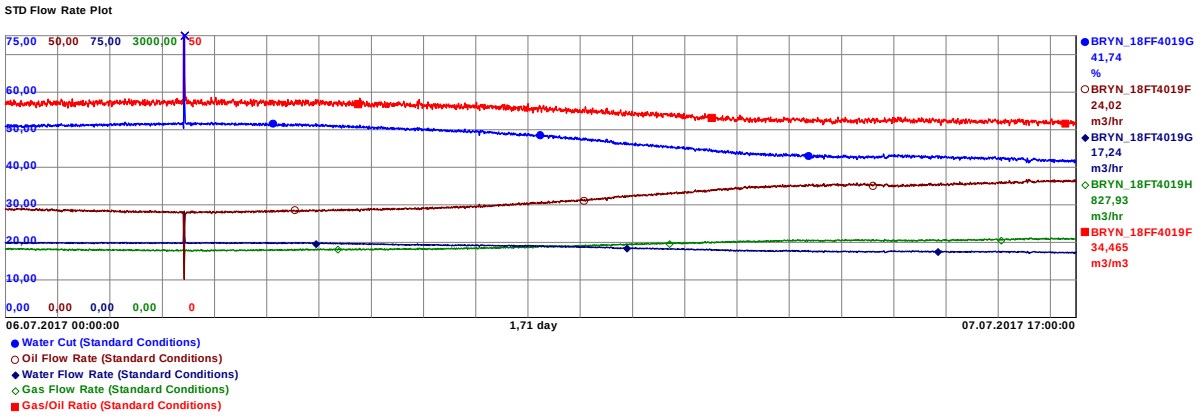

Figure 10: Example – Brynhild MPFM flow measurement data retrieved from Lundin PI

Preventative Maintenance

Regular preventative maintenance secures optimal performance and maximizing uptime of a multiphase meter. It is expected by the client that Roxar/Emerson take a proactive role by continuously following up the performance and technical status all meters. Preventative maintenance checks include check of parameter files, process status, calibration, redundant systems etc. This includes MPFM software upgrades when available to ensure best functionality and performance of the meters. Most of services can be delivered from onshore while having remote connection to the meter, and is a part of the job when making a performance evaluation report. In addition to the deliverables completed using remote

connection, it is recommended to do a yearly site visit for mechanical preventive maintenance which cannot be completed remotely.

Helpdesk Support and Troubleshooting

To ensure timely and efficient handling of technical queries from the client, Roxar/Emerson has dedicated service personnel to complete services via remote support for both Brynhild and Edvard Grieg fields. Based on the required support and service, service engineers will use established escalation process to ensure that the right competence is used to resolve challenges within Emerson/Roxar organization.

For example, when Lundin operation personnel identifies an alarm or sees abnormal readings for a specific MPFM at Edvard Grieg, and their initial troubleshooting is unsuccessful:

- If necessary Roxar can easily log into PI and look at present and historical MPFM data. Both measurement data (flow rates, GOR, WLR etc.) and sensor data (dP, pressure, temperature, density etc.) are logged by PI. No work permit from the client is needed to log into PI.
- If it is not possible to determine what is causing a problem by just looking at PI data; it is possible to remotely log into the Fieldwatch server offshore. To do this Roxar needs a work permit from Lundin offshore. If it is not very urgent Roxar is normally granted (Shield) remote access the day after it is applied for a work permit.
- Then it is possible to connect to the MPFM using the service console program, and retrieve all available raw data logged by the MPFM flow computer.

Service History Reporting and Meter Configuration Back-up

For Edvard Grieg a database over meter service history and status is maintained. An updated version of Event Logger Excel sheet is sent to the client as soon as configuration change is done on a meter. Figure 11, illustrates the historical data tracking. First tab includes the status of all meters installed, while the next tabs include details of all changes that have been completed with each meter. In addition, the PVT-tables currently used by the meters are available in individual meter tabs, as well as MPFM parameter files currently being used for all meters (both Edvard Grieg and Brynhild) are stored. The same is done for service reports.

WELL	MPFM SN	CLIENT TAG	ITEM STATUS	COMMENT	LAST GAMMA CAL	PVT range/ bar; degC	SENSOR SW	CPU version	MPFM ID
A06	2129-13	13FT1318	Operative	OK functionality	06.05.17	(P25-60;T40-80)	V5.07.10	MKIII	132mm
A07	2130-13	13FT1418	Operative	OK functionality	25.03.17	(P25-60;T40-80)	V5.07.10	MKIII	132mm
A08	2131-13	13FT1518	Commissioned awaiting flow		26.03.17	(P25-60;T40-80)	V5.07.10	MKIII	132mm
A10	2132-13	13FT1618	Operative	OK functionality	06.05.17	(P25-60;T40-80)	V5.07.10	MKIII	132mm
A11	2133-13	13FT1718	Operative	OK functionality	06.05.17	(P25-60;T40-80)	V5.07.10	MKIII	132mm
A12	2134-13	13FT1818	Operative	OK functionality	06.05.17	(P25-60;T40-80)	V5.07.10	MKIII	132mm
A13	2135-13	13FT1918	Commissioned awaiting flow		21.03.17	(P25-60;T40-80)	V5.07.10	MKIII	132mm
A15	2138-13	13FT2018	Operative	OK functionality	16.05.17	(P25-60;T40-80)	V5.07.10	MKIII	132mm
A18	2139-13	13FT2318	Commissioned awaiting flow		23.03.17	(P25-60;T40-80)	V5.07.10	MKIII	132mm
A19	2126-13	13FT2418	Operative	OK functionality	24.03.17	(P25-60;T40-80)	V5.07.10	MKIII	132mm
A20	2128-13	13FT1118	Commissioned awaiting flow		22.03.17	(P25-60;T40-80)	V5.07.10	MKIII	132mm
Import Line 1 'Oil'	2125-13	13FT1349	Operative	OK functionality	06.05.17	(P15-35;T50-70)	V5.07.10	MKIII	173mm
Import Line 2 'Gas'	2124-13	13FT1350	Operative	Gamma Cal pending	13.11.16	(P15-35;T35-55)	V5.07.10	MKIII	173mm

STATUS | A06 | A10 | A11 | A12 | A15 | A07 | A08 | A13 | A18 | A19 | A20 | Import Line 1 | Import Line 2 | EG PVT | Ivar Åsen Line 1 PVT | Ivar Åsen Line 2 PVT

Figure 11: Edvard Grieg MPFM Event Logger sheet

Cooperation Meetings
Regular follow up/phone meetings to discuss the performance of the meters are scheduled between technical teams at Lundin and Emerson/Roxar. WebEx/Lync enable screen sharing.

- For Edvard Grieg, weekly cooperation meetings are held to run through the status and measurements of all Roxar instruments at Edvard Grieg site.
- For Brynhild, until production was started weekly follow up meetings were held to ensure successful start-up. Following start-up these meetings are completed as needed and on request from Lundin.

In addition to teleconference meetings, face to face meetings are held at the Lundin office approximately twice a year.

Training
Roxar/Emerson has conducted multiphase training for Lundin to provide clarity and knowledge on meter measurement technology and operations. Training provided the technical personnel interfacing with the meter, a better understanding of the alarms and readings

Verification Tests
Verification tests are completed from time to time at Brynhild against a test separator to check of MPFM performance. The Edvard Grieg test separator does not provide a full set of verification data, so here the MPFM verification is also completed by comparing the measurement against calculated flow rates, WLR and GOR done by the client.

Calibration
Calibration can be done either remotely or during a site visit.

Edvard Grieg:
- Remote connection (via Shield) to Roxar Fieldwatch server at Edvard Grieg. Fieldwatch is able to store data and plot data, however the calibration has to be done using the service console program. The service console program is installed on the Fieldwatch server, and each meter has a shortcut with corresponding configuration settings (IP-address, etc.).
- Calibration can be done online/real-time or based on historical data from Fieldwatch or MPFM flow computer. Since the service console program is not running continuously and logging data; data will be retrieved from the MPFM flow computer using the service console for this operation. The flow computer has a ring buffer storage that is able to store data for several months (depending on how many parameters are stored and how often these are updated).
- If calibration is done during site visit this can be done either using the service console program installed on the Fieldwatch server. Alternatively, a service PC can be connected directly to the flow computer cabinet (in safe area).

Figure 12: MPFM measuring Ivar Aasen import line at Edvard Grieg

Brynhild:

- Roxar can connect to PI via Lundin Citrix system and read/plot tags from the MPFM.
- Historical PI (shutdown) data can be used to calculate new MPFM calibrations. A copy of the parameter file in the MPFM flow computer offshore is then updated with the new calibration and sent to the client. Upon receiving the data, Roxar service personnel can start the service console program and load the new parameter file using the remote connection.
- If calibration is done during site visit it is completed using the service console program installed on a client computer offshore. Calibration can be done online/real-time or based on historical data from PI.

Other Ways of Measurement Evaluation/Quality Checks

The MPFM has raw data measurements/register that can tell about the performance/health status of the meter. By for example comparing capacitance measurements from the electrodes it is for example possible to say if scaling can be an issue. During a shutdown valuable static values are logged by the MPFM flow computer and these data can later be used for analysis and also for calibration of the MFPM. Raw data registers are not only accessible through the service console; several of these registers are available both through Fieldwatch and PI.

6. Conclusion

Based on our experience from three years of close cooperation with Lundin; there are several factors that have made this into a successful collaboration:

- Regular reports about the performance of the meters
- Rapid response from Roxar/Emerson when contacted by Lundin
- Remote access to the multiphase meters
- Regular meetings; these have mainly been online meetings
- Client has a basic knowledge about the MPFM measurement principles
- Single point of contact, a dedicated person responsible for writing the performance evaluation reports has a proactive role to regularly check the performance and technical status of the meters. If anything abnormal or questionable is discovered, clients is immediately informed and corrective action planned.
-

Benefits for the client that will come out of a collaborative environment will be:

- Up to date knowledge of the status/performance of the meters
- Better understanding of how a multiphase meter works, and the optimal way of using it
- Rapid response if a problem should occur with a multiphase meter.
- Because of the remote connection most problems are normally solved much faster than if it this was not possible
- Less organisation and expenses related to mobilization of Roxar/Emerson personnel to go offshore to solve a problem and more efficiently executed preventative maintenance site visits.

Benefits of the collaborative environment are mutual, and there are several benefits can be listed for the technology provider:

- Better understanding of the real field/flow challenges for the multiphase meters offshore, which is valuable input to both the Service department and also the Engineering and Development department that is responsible for MPFM software and hardware developments/improvements.
- Possible in most cases to give the client fast and good support without needing to mobilize for an offshore job.