Main Index

NORWEGIAN SOCIETY OF CHARTERED ENGINEERS

NORWEGIAN SOCIETY FOR OIL AND GAS MEASUREMENT

NORTH SEA FLOW MEASUREMENT WORKSHOP 1993
26 - 28 October, Bergen

High Accuracy Wet Gas Metering

by

Mr. A.W. Jamieson/Mr. P.F. Dickinson,
Shell U.K. Exploration and Production

HIGH ACCURACY WET GAS METERING

Authors

P.F. Dickinson A.W. Jamieson

Shell U.K. Exploration and Production

Summary

For economic development of several small marginal gas fields in the Southern North Sea, evacuation routes may be shared with other parties. It is therefore necessary to apply high accuracy metering prior to commingling. Conventional orifice metering stations require the gas to be dry, necessitating the installation of expensive separation facilities whose cost may make development of these fields uneconomic. An alternative is to install venturi meters to measure the wet gas flowrate of each well stream. The readings can then be summed to give the total production with an overall uncertainty of about 1%. This is similar to a conventional fiscal metering station. For a typical field eliminating the bulk separation facilities can save up to £20 Million. The paper covers the design of the metering system, its practical implementation and quantification of the measurement uncertainty.

High Accuracy Wet Gas Metering

Introduction

Shell Expro has discovered a number of small gas fields in the Southern North Sea which are not economically viable unless costs can be significantly reduced. If unprocessed well stream fluids could be metered to sufficient accuracy to allow commercial custody transfer and to satisfy Department of Trade and Industry requirements it would then be possible to commingle fluids from a number of fields prior to separation. It is then no longer necessary to dedicate facilities for processing gas to each field, thus allowing the use shared processing and transportation facilities including ullage within existing infrastructure. Furthermore, metering the gas to high accuracy as it leaves the field allows much greater operational flexibility of both offshore and onshore facilities. All of the above lead to significant savings; the removal of the bulk processing facilities on a single development can alone realise savings of up to £20 million.

Extensive work on metering wet gas has been performed previously. Most notable is the work of Murdock[1] and Chisholm[2,3] dealing mostly with wet steam measurements. They developed semi-empirical equations that quantified the over-reading of orifice meters caused by entrained liquids.

Shell Research carried out extensive tests on behalf of NAM in the Netherlands during the late 1980s. These demonstrated that the over-reading of both orifice meters and venturi meters measuring natural gas at pressures around 80 bar and with liquid fractions up to 4% by volume followed Chisholm's and Murdock's predictions. This work was presented at the 1989 North Sea Flow Metering Workshop[4]. For liquid fractions up to about 4% the over-reading appeared to increase linearly as the liquid content increased. A measurement uncertainty additional to that experienced on dry gas was quantified to be about 1% per 100 m^3 liquid per 10^6 normal m^3 gas. This results in a total uncertainty of less than 2% for a well installed orifice or venturi meter for liquid fractions up to 1% by volume. Although there were differences between the field measurements and Murdock's and Chisholm's expressions, the errors involved were acceptable for NAM's applications. However, these differences are too large to be generally acceptable for fiscal and custody transfer purposes.

NAM have used wet gas meters to eliminate test separation facilities. For Shell Expro the immediate interest is in eliminating dedicated bulk processing facilities and permitting the use of shared transportation facilities. Figure 1 shows an overview of a typical simplified development indicating equipment which can be eliminated. The elimination of test separators is seen as an additional long term goal. For typical UK Southern Basin gas fields Shell Expro is satisfied that high accuracy, approaching 1% uncertainty, wet gas metering systems are now fully practicable and can be satisfactorily operated on unmanned off-shore installations.

Wet Gas Metering System

Overview

The measurement system (Figure 2) comprises a traditional venturi flow meter installed in each well flow line with pressure and temperature measurements providing on-line corrections for changes in operating conditions. A test separator, with an on-line gas chromatograph and conventional manual sampling facilities to permit on-shore analysis of the liquid samples, is used to establish the well stream composition and other parameters during periodic well testing. Flow calculations, including Murdock's compensation for the entrained liquids, are performed in by an on-line computer system. Murdock's equation (1) was selected as it appears to produce a lower uncertainty than Chisholm's equation.

$$Q_g = \frac{Q_u}{1 + 1.26 \frac{(1-X)}{X} \frac{C_g \varepsilon_g}{C_l} \sqrt{\frac{\rho_g}{\rho_l}}} \qquad (1)$$

Where:
Q_g is the corrected gas mass flowrate,
Q_u is the uncorrected gas mass flowrate,
X is the gas mass fraction,
C_g and C_l are the venturi gas and liquid discharge coefficients,
ε_g is the expansibility coefficient for the gas,
ρ_g and ρ_l are the gas and liquid densities.

Primary Measuring Element

A venturi meter, generally in accordance with ISO 5167, is installed in each well flow line, upstream of the choke to avoid the introduction of swirl. The Xmas trees are installed in such a manner that no out of plane bends are introduced upstream of the meter. Venturi meters are selected as the primary measuring elements. They are extremely robust and when combined with modern high precision differential pressure transmitters can achieve the required accuracies over a wide (ten to one) turndown. Pressure and temperature measurements are made at each meter. The differential pressure, pressure and temperature instruments are "smart" transmitters operating in digital mode. In addition to providing high accuracy and stability these instruments provide comprehensive fault diagnostics when integrated within a computer system.

The installation of custody transfer flow meters on a not normally manned installation could be expected to generate maintenance problems. However, the robustness of the venturi and the stability and reliability of modern transmitters are such that it is only necessary to check calibrations at intervals longer than six months to maintain the required accuracy.

The gas mass fraction, i.e. the gas mass divided by the total mass, and the compositions of the gas and liquid fractions must be measured at regular intervals. Currently it is only possible to measure these parameters with sufficient accuracy by using a test separator. A test separator is, however, significantly smaller and cheaper than a bulk production separator. More importantly for unmanned installations, it does not require immediate remedial maintenance when a malfunction occurs as production can continue uninterrupted until the next planned visit. Other applications of wet gas metering have stressed the elimination of the test separator. For us, elimination of the bulk separation equipment and commingling with other fields are the main benefits. Elimination of the test separator would be a further bonus for the future. Figure 3 shows the test separator arrangement. Bold lines indicate the fluid path when a well is being tested.

The gas flow from the test separator is measured using a venturi installation similar to the well flow line meters. The liquid from the test separator is measured using a Coriolis type mass flow meter which will give the liquid mass flowrate and density. The gas mass fraction is calculated from the integrated gas and liquid mass flow over the test period. Each well should only require to be assessed about once a year, as the composition of each well stream is not expected to vary rapidly. Initially it will be necessary to assess the wells at shorter intervals.

Sample facilities are provided on both the liquid and gas outlet streams. Manually taken liquid samples are analysed in an on-shore laboratory to determine the liquid composition. Note that the liquid samples do not need to be representative of the total flow, only a representative sample of the hydrocarbon liquids and a representative sample of the aqueous liquids are required. Onshore analysis of manually taken gas samples could also be used to obtain the gas composition, but we consider it preferable to use an on-line gas chromatograph. Gas density at test separator pressure and temperature can be calculated from the gas composition using AGA 8.

The liquid and gas composition data are combined with their respective flowrates to give the liquid and gas mass component flowrates, and hence the total well stream mass component flowrates (Figure 4). We have also determined the gas mass fraction, the gas density and the liquid density at the pressure and temperature prevailing during the well test. We now use all of these data as a basis to calculate the liquid and gas flow rates at other conditions of pressure and temperature.

Calculations

The calculation procedure is illustrated in Figure 5. The total well stream composition obtained from a well test is fed into a flash calculation. This calculates the changes in composition and the consequent changes in gas density, liquid density and gas mass fraction as line pressure and temperature vary.

The standard flow equation in ISO 5167 is used to calculate the uncorrected gas mass flowrate from the differential pressure across the venturi and the line gas density. Murdock's equation, modified as described below, is used to calculate the corrected gas mass flow. Finally, the liquid mass flow rate and the total mass flow rate are calculated from the gas mass fraction and the gas mass flowrate.

Modifications to Murdock equation

In the field measurements made for NAM[3] the slope of the graph of over-reading versus liquid content for venturi meters was some 5% higher than that predicted by Murdock's equation. The origin of this discrepancy is not clear, but it is too large to simply apply Murdock's equation directly and achieve high accuracies. As the total emphasis of our approach is to be able to apply wet gas metering now using existing equipment, it is important to be able to apply the most accurate correction to the metered wet gas. The value 1.26 in Murdock's equation was determined empirically. If this value is replaced by a variable M as in equation (2) we retain the form of Murdock's equation but can adjust it for wet hydrocarbon gas at the field operating conditions.

$$Q_g = \frac{Q_u}{1 + M\frac{(1-X)}{X}\frac{C_g \varepsilon_g}{C_l}\sqrt{\frac{\rho_g}{\rho_l}}} \qquad (2)$$

The value of M can be assigned from data gathered in laboratory or field tests. In laboratory tests measured amounts of liquid can be injected downstream of a reference meter but upstream of the wet gas venturi. The over-readings for different gas mass ratios, flowrates and pressures can be measured. In the field, at each well test the over-reading of the well venturi meter can be obtained directly by comparison with the test separator venturi and a value for M obtained for the conditions prevailing during the test. As the number of well tests increases the value for M can be refined, in principle for each well. However, we expect that in practice a single adjustment covering the platform will suffice. Eventually, as more data are obtained, it should be possible to refine the equation to provide a highly accurate equation specifically for natural gas at high pressure.

Uncertainties

Single meter

The overall uncertainty calculations were made in accordance with ISO 5168. The uncertainty for the venturi installation operating with dry gas was calculated in accordance with ISO 5167. The uncertainties associated with Murdock's equation were then calculated and the two combined to produce an overall uncertainty value for a single venturi meter measuring wet gas. Table 1 gives the relevant parameters and the values used in the analysis. Calculations have been performed for a typical development for high liquid loading. In this case the uncertainty in mass flow was shown to be 1.35%. Lower liquid loadings result in lower uncertainties; at design conditions the uncertainty is 1.25%.

The uncertainty of the gas mass ratio is calculated assuming that the gas and liquid flows are measured periodically using a test separator. The uncertainties for other parameters, given in Table 2, are taken from manufacturers' standard literature, from recommendations by NEL or from past practical experience.

A major source of uncertainty comes from the flash calculation and physical property generator used to calculate the gas mass fraction and gas and liquid densities over a wide range of operating conditions. Typical uncertainties are of the order of 3 - 5%. However, we have accurate direct measurements of liquid density from the well test, and application of AGA 8 gives the gas density from the gas composition with an uncertainty of 0.1% up to 120 bar and to 0.3 % up to 170 bar. To obtain the line gas and liquid densities we calculate the differences from the densities obtained at test separator conditions, effectively calibrating the flash calculation. By this combination of calibration and working in a differential mode the uncertainty in gas and liquid densities is reduced to about 2.0%.

Murdock's equation itself contributes significantly to the overall uncertainty. From the NAM test data we estimated an uncertainty of 0.76% for the highest liquid case. We anticipate that this uncertainty will be reduced as more data becomes available from laboratory tests and field experience.

Total export flow

For an installation where a number of nominally identical wet gas meters are summed the overall uncertainty in total mass flowrate is given by:

$$U_T = \sqrt{U_s^2 + \tfrac{1}{n} U_r^2} \qquad (3)$$

where U_S and U_T are the systematic and random uncertainties in the mass flowrate of a single wet gas meter and n is the number of wells. The uncertainty in total flow is therefore less than that of a single meter as the random errors present partially cancel.

A current Southern North Sea prospect which is expected to produce significant quantities of liquid has been selected as an illustration. It requires eight production wells. Table 3 gives the uncertainty in summed flowrate for up to eight wells, two liquid loadings, and two values of uncertainty in gas density. When all wells are producing at design flow rates the overall uncertainty in export flow rate measurement is about 1.15% at the highest liquid loading (about 0.9% by volume at line conditions). This is similar to a conventional sales gas export meter.

The above calculations assume that the gas and liquid densities and the gas mass fraction are calculated using a flash calculation and physical property generator which covers a wide range of pressure and temperature. It is possible to significantly reduce the uncertainties in these parameters if the operating envelope remains close to the test conditions. It is also possible to use the gas chromatograph to obtain the gas density of each well stream more frequently. Either of these allows the uncertainty in the gas density to be reduced to less than 1% which results in an uncertainty of about 1% for a single meter and 0.94% in the total export flow.

Either approach for reducing uncertainties can be implemented immediately. However, the first results in restricted operational flexibility while the second requires increased operating and maintenance involvement. We believe that it will be possible to achieve these lower uncertainties when we define the procedures for calibrating the flash calculation and physical property generator.

Practical points

To avoid complicating the measurement system, chemical injection points are only installed downstream of the metering system. Materials for all the piping and equipment upstream of the choke valves will be manufactured from corrosion resistant materials.

Installing a gas chromatograph on a not normally manned facility should not be treated lightly. We have successfully installed a gas chromatograph on a Southern North Sea platform for a trial period of some nine months, with virtuallly no intervention required. We are therefore confident that this is feasible. It is essential to ensure that no free liquid enter the columns of the gas chromatograph otherwise it may be out of action for days. We took the gas sample from the top of a horizontal run of pipe into a sample conditioning chamber. This was simply a short piece of vertical 2" pipe with a helical steel strip inside. This encouraged any liquid to gather on the walls and drain back into the pipeline. The sample should be heated sufficiently after leaving the sample conditioning chamber to ensure that no liquid can form in the pressure let down system for the gas chromatograph.

Valving will be included on the test separator to allow all the well fluids to pass through the gas venturi meter. This allows the over-reading due to liquids to be determined accurately. It also provides a check for the well flowline meters.

Further Work

Modifications to standards

Although ISO 5167 covers the use of Venturi meters, it does so only up to Reynolds number of 10^6. This does not cover the Reynolds numbers commonly met with in normal gas production operations. This is really a reflection of the lack of fully traceable data on which the standard is based.

The tappings given in ISO 5167 for a venturi are four for the upstream and throat pressure tappings, joined by a piezometer ring. This is impractical for wet gas metering as liquid will always gather in the lower parts of the piezometer ring. It would be preferable to have only two tapping points on the upper side of the venturi. However, tests will be required to show that the difference in discharge coefficient is negligible for multiple or single tappings.

The question of manufacturing tolerances must also be addressed. Currently, ISO 5167 gives an uncertainty of 1% in discharge coefficient for a venturi with a machined convergent for line internal diameters between 50 mm and 250 mm, and an uncertainty of 0.7% for venturis with a rough cast convergent for line internal diameters between 100 mm and 800 mm. These values are unacceptably large for high accuracy wet gas metering, but it is unlikely that they can be reduced to the value of 0.41% that can currently be achieved by calibration in a high quality laboratory installation.

If there is sufficient interest within the gas industry for wet gas metering a joint industry effort to extend the gas metering standards should be considered. A programme of work would be required to establish the reproducibility of manufactured venturis and the conditions under which they should be used. Further work is also required to quantify

the relation between the over-reading and the liquid content in more detail, particularly for higher pressures. In the long term it may be necessary to draw up a separate standard for wet gas meters.

Cheaper methods to determine the gas mass fraction

For many applications it is clearly desirable to eliminate the need for a test separator to determine the gas and liquid fractions, and the over-reading of the flowline venturi meters. Tracer techniques are being developed by Shell Research. Two tracers, one specific for the gas phase and one specific for the liquid phase are injected at known flow rates and at a point where good mixing can be obtained. The concentration of the tracers are measured downstream. The flowrates of the liquid and gas phases can be determined and hence the gas mass fraction.

Other applications

There is an obvious requirement for wet gas metering on subsea installations but there are significant practical difficulties in determining the liquid content in these circumstances. A subsea test separator is not an attractive option. Tracer injection into each well stream is straightforward but extraction of samples from each well stream to measure the tracer concentrations is very difficult. A more practical means of determining liquid content is clearly required.

Wet gas meters are special examples of multiphase meters. Multiphase meters in combination with a test separator could be used in a similar way to the wet gas meters to give higher accuracy metering of the multiphase flows from satellite wellhead platforms. The key is to reduce especially the systematic uncertainties. If the systematic and random uncertainties in a single meter could both be reduced to 4%, an overall uncertainty of 5% could be achieved with four wells.

Conclusions

High accuracy wet gas metering is a very attractive technique which is immediately available using proven equipment.

Unprocessed gas exported from typical Southern North Sea gas fields can be metered with an uncertainty of around 1% using venturi meters. This uncertainty is similar to that of a conventional sales gas meter.

Wet gas meters are suitable for installation on not normally manned platforms.

Bulk processing equipment is not required on the producing facility to allow metering. This reduces considerably the cost of a typical installation and allows new fields to utilise existing infrastructure at minimal cost. Savings in operational costs can also be achieved as wet gas metering installations are robust and require lower maintenance than conventional metering stations.

It is clearly possible to develop high accuracy wet gas metering further. Cheaper, more accurate methods of determining the gas mass fraction mean that a test separator will not be required. An extended and improved section on Venturi meters in the gas metering standards appears to be essential.

A similar approach can be used for metering unprocessed multiphase fluids from a satellite wellhead platform.

References

1. J.W. Murdock, Two phase flow measurement with orifices, Journal of Basic Engineering, December 1962.

2. D. Chisholm, Flow of incompressible two-phase mixtures through sharp edge orifices, Journal of Mechanical Engineering Science, Vol. 9 No. 1 1967

3. D. Chisholm, Research Note: Two phase flow through sharp edge orifices, Journal of Mechanical Engineering Science, I.Mech.E 1977.

4. G. Washington, Measuring the flow of wet gas, North Sea Flow Metering Workshop, Haugesund, Norway, October 24 -26, 1989.

Tables

1. Parameters and values used in analysis
2. Uncertainties in parameters
3. Calculated uncertainties in summed flowrate

Figures

1. Simplified gas facilities on offshore platform
2. Wet gas measurement system
3. Test separator arrangement
4. Determination of fluid composition
5. Wet gas computation

Venturi Beta	0.6
Upstream Pressure	93 Bar.a
Gas Density	
- High liquid loading	86.34 kg/m^3
- Medium liquid loading	78.04 kg/m^3
Discharge Coefficient Gas	0.995
Discharge Coefficient Liquid	0.995
Expansibility Factor Gas	0.998141
Liquid Loading (per 10^6nm^3 of gas)	
- High liquid loading	91.5 m^3
- Medium liquid loading	73.4 m^3
Gas Mass Ratio (Gas mass/total mass)	
- High liquid loading	0.928
- Medium liquid loading	0.94
Liquid Density	
- High liquid loading	681.2 kg/m^3
- Medium liquid loading	708.1 kg/m^3

Table 1. Parameters and values used in analysis

	Random %	Systematic %	Total %
Uncertainty in Gas Discharge Coefficient	0.100	0.400	0.410
Uncertainty in Differential Pressure	0.141	0.141	0.200
Uncertainty in Expansibility Factor	0.000	0.015	0.015
Uncertainty in Gas Density			
- High Density Uncertainty	1.410	1.410	2.000
- Low Density Uncertainty	0.710	0.710	1.000
Uncertainty in Liquid Density	1.410	1.410	2.000
Uncertainty in Gas mass ratio from well test (Gas, liquid uncertainties 1% & 0.5% resp.)			
- High liquid loading	0.057	0.057	0.080
- Medium liquid loading	0.047	0.047	0.067
Uncertainty in Liquid Discharge Coefficient	0.100	0.40	0.410
Uncertainty in Murdock's equation (1% per 100m^3 liq. to 10^6 nm^3 gas)			
- High liquid loading	0.000	0.760	0.760
- Medium liquid loading	0.000	0.610	0.610

Table 2. Uncertainties in parameters

Number of wells summed	High D.U. High L.L.	High D.U. Medium L.L.	Low D.U. High L.L.	Low D.U. Medium L.L.
1	1.33	1.25	1.00	0.89
2	1.23	1.14	0.97	0.86
3	1.19	1.10	0.96	0.84
4	1.17	1.08	0.95	0.84
5	1.16	1.07	0.95	0.83
6	1.15	1.06	0.94	0.83
7	1.15	1.06	0.94	0.83
8	1.14	1.05	0.94	0.83

Table 3. Calculated uncertainties in summed flow rate for up to eight wells at high and medium Liquid Loading (L.L.) and at high and low gas Density Uncertainty (D.U.)

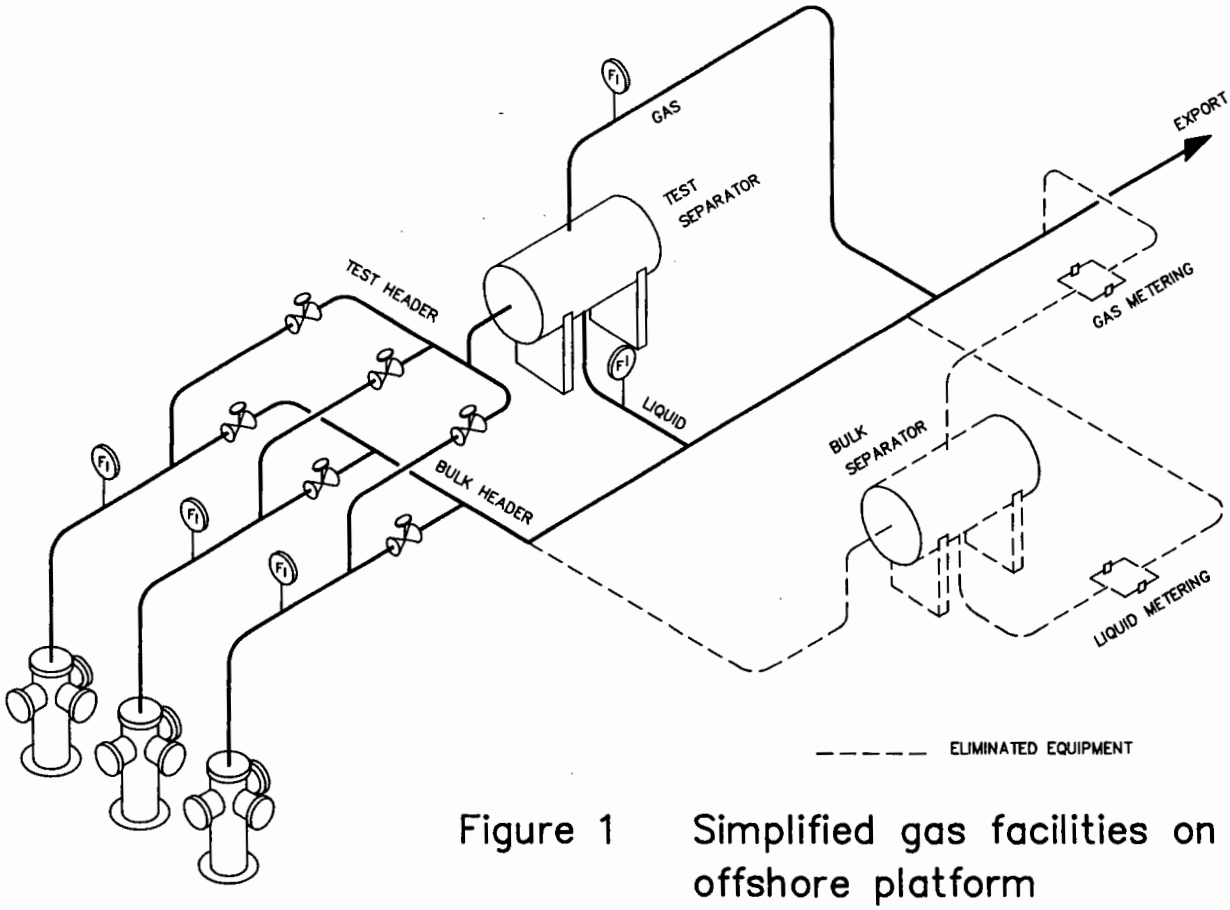

Figure 1 Simplified gas facilities on offshore platform

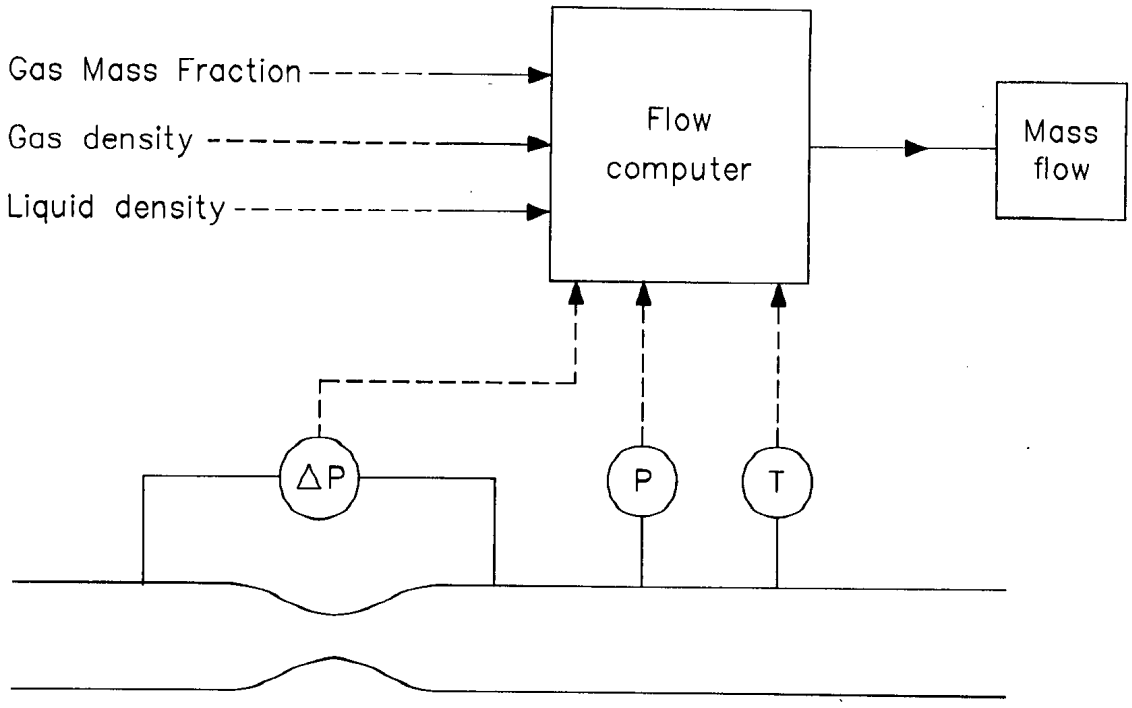

Figure 2 Wet gas measurement system

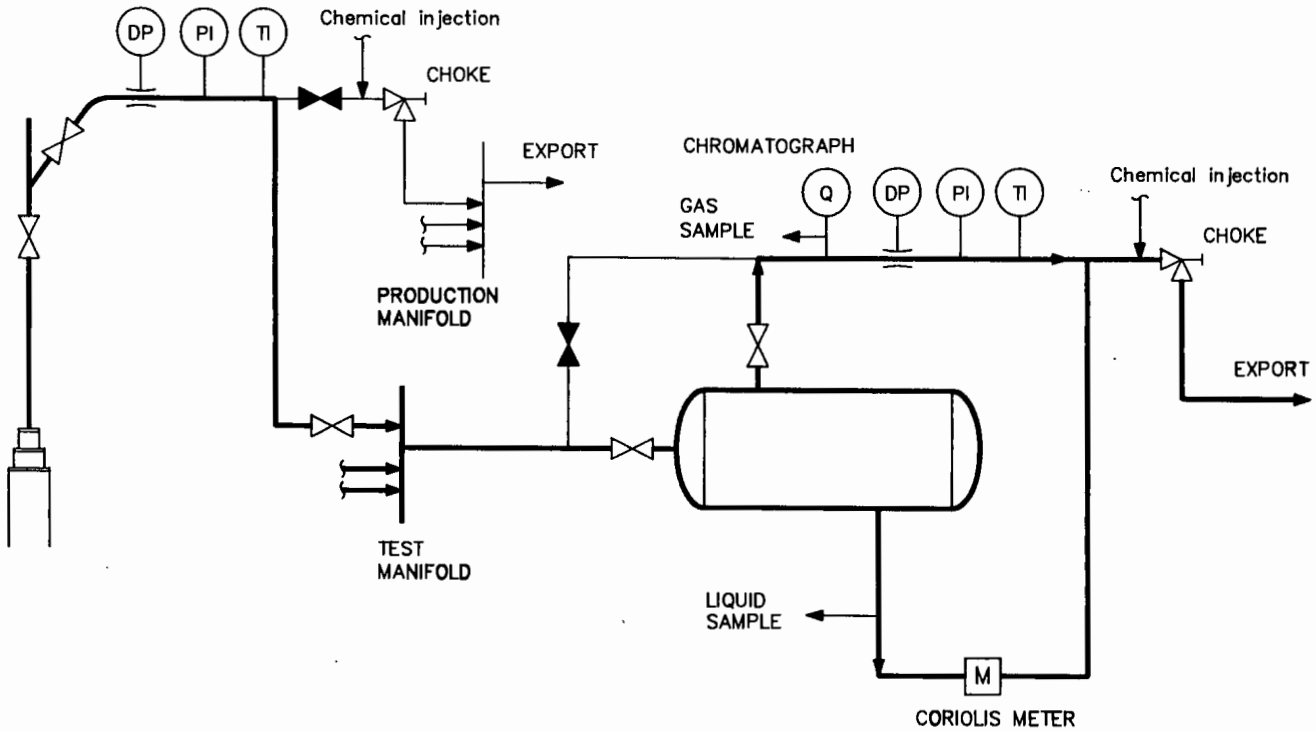

Figure 3 Test separator arrangement

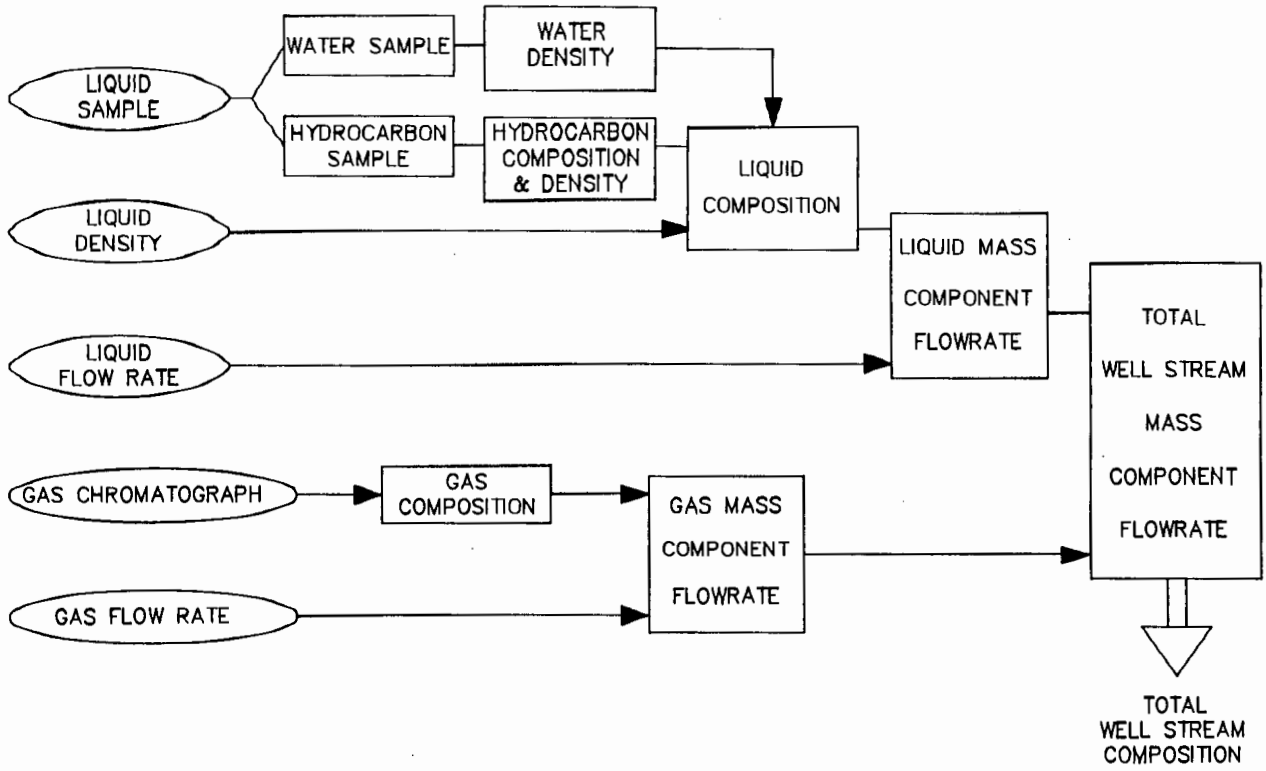

Figure 4 Determination of fluid composition

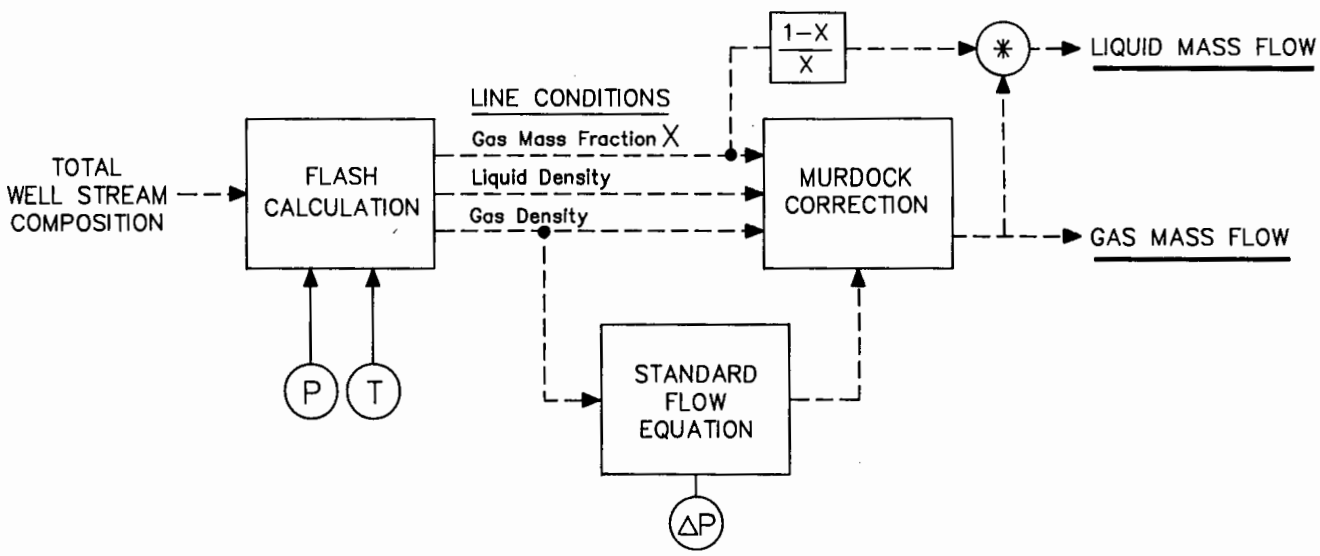

Figure 5 Wet gas computation