Main Index

NORWEGIAN SOCIETY OF CHARTERED ENGINEERS

NORWEGIAN SOCIETY FOR OIL AND GAS MEASUREMENT

NORTH SEA FLOW MEASUREMENT WORKSHOP 1993
26 - 28 October, Bergen

Optimal Measurement Accuracy for Allocation Measurements

by
Mr. Håkon Nyhus, Foundation for Research in Economics and Business Adm.
Mr. Tor Jan Thorvaldsen, Statoil
Mr. Øyvind Isaksen, Christian Michelsens Research AS

Optimal Measurement Accuracy for Allocation Measurements

Håkon Nyhus[1], Tor Jan Thorvaldsen[2] and Øyvind Isaksen[3]

[1] SNF, Foundation for Research in Economics and Business Administration, Breiviken 2, N-5035 Bergen-Sandviken, Norway.

[2] Statoil, P. BOX 300 N-4001 Stavanger, Norway.

[3] Christian Michelsen Research AS, Fantoftvegen 38, N-5036 Fantoft, Bergen, Norway.

ABSTRACT: Due to the fact that newly discovered oil field often are small compared to those discovered in mid 20, new and less expensive production solutions must be used. If the fields are in a reachable distance from an existing process platform, an economically production strategy could be to transport the production to existing process capacity. The different marginal oil fields (*i.e.* satellite fields) and the process platform will often have different constellation of owners, hence, there will be a need for allocation measurements. For obvious reasons it will be expensive to use standard fiscal metering stations for each satellite fields, so new and more cost effective measurement systems must be used. That is, the measurement accuracy will decrease, and hence not within the existing regulations. In this work there has been developed an economical model which calculates the net present value as a function of measurement accuracy, production etc. This model indicates that fiscal measurement standards is often not economically, neither for the owner of the satellite field, the owner of the process platform and the government.

1. Introduction

New satellite fields are coming into production in the Norwegian continental shelf. Existing infrastructure such as *Statfjord* and *Gullfaks* platforms are located in the vicinity of some of these new fields. Due to spare processing capacity the new fields are developed with subsea wells with pipelines routing the wellstream directly into the existing platforms. We also see a need for partially processing and dewatering of the wellstream at one platform, then further transporting of the crude to other platforms in the area for last stage separation, storage, fiscal metering and loading (see Figure 1).

Commingling of crudes demand a mass allocation system. The crudes are not stabilized so metered mass must be multiplied with component dependent shrinkage factors.

The crude coming from satellite fields must pay a processing tariff for each barrel of oil and gas delivered to the existing platforms. The crudes to be commingled are coming from different licenses and vary in quality. Calculating the technical value of the different crudes show a significant difference in value. Allocation measurement is therefore also needed for supplying data for tariff accounting and tanker scheduling purposes. Density and composition are needed for value adjustment between different streams and converting mass allocation to volume distribution between the participants.

Looking at Figure 1, showing a relevant future allocation scheme for oil, indicates an increasing need for new metering and sampling equipment for oil and gas. To secure single phase (due to unstabilized crude) through turbine meters and orifice plates, booster pumps and gas heaters are necessary equipment to obtain an accuracy within the existing regulations.

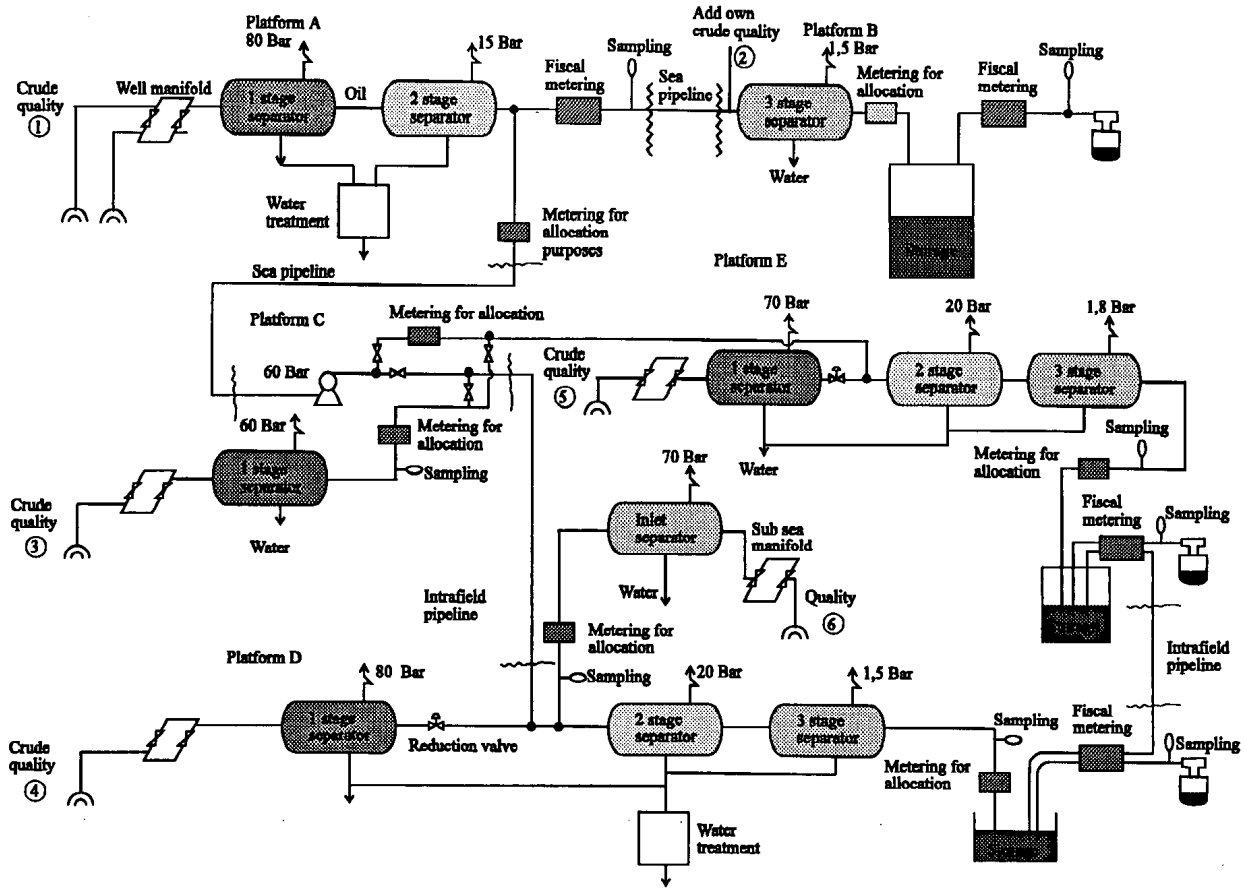

Figure 1. Future allocation scheme for oil.

Use of multiphase flow meters could in this case save place, but the obtained accuracy would often not be within regulations. Figure 1 also shows that crudes are commingled under varying pressure and temperature conditions (gas/oil ratios vary from *20* to *80*). To find allocated mass at standard conditions, we must introduce several shrinkage factors.

To calculate allocated mass, we often also have to accept measurement by difference. Figure 1 shows that crude oil from *platform A* (*quality 1*) can either be routed to *platform B* or *C*. All crude oil from *A* is metered. Crude oil from *platform A* to *platform E* is metered. Crude oil masses routed to *platform D* are found by subtracting metered mass to *platform C* from total input (*i.e.* measured by difference). This scheme indicates that no gas must be flashed of at *platform C*. *Quality 1* is then mixed with *platform C* and *platform D*'s own production (*quality 3* and *4*). *Platform D* and *E* do not have metering facilities after *1 stage* separator. Their mass entitlement are calculated as a difference between metering to storage and the result from metering by difference. To further complicate the picture a satellite field is also tied into *platform D* (*quality 6*). The resulting blend can if necessary be routed to *platform E* storage for lifting purposes.

All allocation of crude is done on dry (free of water) mass basis component for component up to C_{6+}.

$$M_{Allocated} = \sum m(C_i) \cdot ORF(C_i), \tag{1}$$

where $M_{Allocated}$ equals the total allocated mass, $ORF(C_i)$ equals the oil recovery factor for component C_i, $C_i = C_1, C_2, C_3, iC_4, nC_4, iC_5, nC_5, C_{6+}$ and $m(C_i)$ equals the mass per component.

Most of the commingling points are after *1-stage* separation where water content from 2-5% can be observed. A good on line water monitoring is therefore very important for calculating a correct dry crude oil production. Allocated gas to a satellite field is allocated as total mass minus allocated oil mass. A water measurement with low metering uncertainty is therefore necessary for a reliable total allocation uncertainty for the satellite field.

The crude oil qualities vary from light paraffinic crude oils to heavier naftenic/aromatic types of crude. The densities vary from approximately *0,81* to *0,88*. Due to different composition and market value, there must be some sort of value adjustment between the qualities blended together. To get input data for a value adjustment procedure all qualities must be sampled, analysed for composition, distillation yields, water and sediments.

During negotiation of processing agreements, involved companies develop empirical formula for mass allocation, tariff calculation and value adjustment. Those formula are a mixture of results from process simulators calculating shrinkage factors, measured shrinkage factors, distillation of crude oil yields and not to forget often pure commercial issues.

Remarks:

- When we are looking at all the metering points, metering by difference, water monitoring, shrinkage factors, crude oil value adjustment procedures, **we may wonder about total metering uncertainty.**
- Booster pumps, heaters (to secure single phase), metering equipment and mechani-

cal samplers are **costly and occupy much space** on the existing platforms. New technology (*e.g.* multiphase metering systems) and regulations can save space.

- At some metering points we are using **expensive measurement** equipment and at other metering points we relay on **metering by difference**.
- Measurement under high pressure and on line water monitoring of unstabilized crude **influence also** on the total allocation uncertainty.
- In the next *5-10* years, new fields (more than *10*) will come into operation. Most of them will be tied into existing platforms.
- To optimize processing capacity **intrafield pipelines** must be built.
- What sort of **metering methods** and **metering equipment** do we need in the North Sea for coping with this development?

2. Allocation Measurements and Sampling of Crude streams

Production from new fields in the North sea are likely to be routed to existing process platforms. Commingling of crudes demands allocation and technical value adjustment procedures as explained earlier.

Satellite field is developed by two or more sub sea wells. Unstabilized crude is routed to a existing processing platform. Tie-in is done by construction of new inlet crude heaters and new inlet separators (*1-stage* separation). Booster pumps, gas heaters, crude oil and gas metering packages, calibration equipment and sampling equipment must be installed before commingling of crudes in *2-stage* separator.

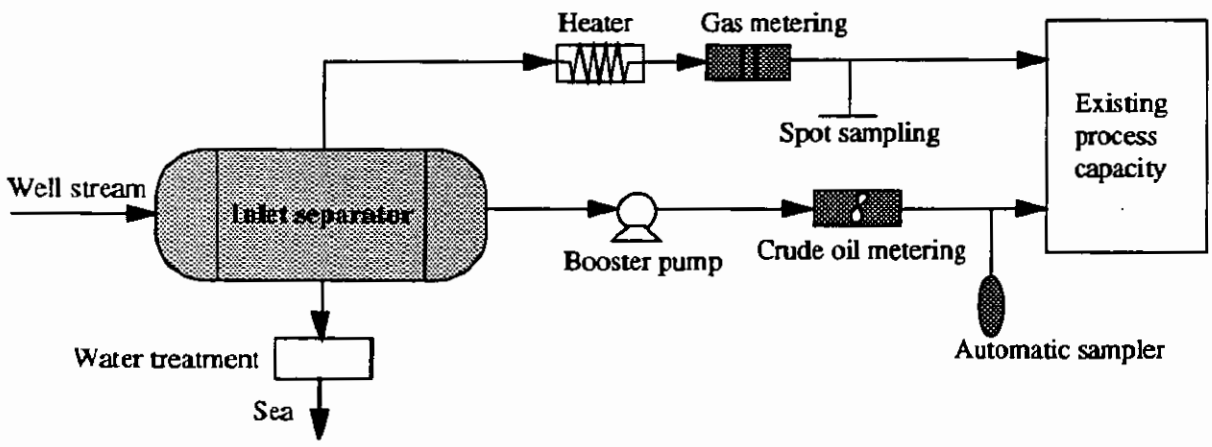

Figure 2. Satellite field tied into an existing platform. Gas and oil inlet metering is needed for allocation purposes. Fiscal standard single phase crude and gas metering is used to day.

Measurement and sampling of crude to storage is also needed for calculating oil recovery factors.

Experience from tie in of *Tordis* and the *Statfjord* satellites indicates that such modification work is time and cost consuming. Use of new technology could save space, but often lack of

accuracy compared to fiscal standards results, and hence, not within regulations.

2.1. Produced mass from a satellite field

The allocated mass to the satellite field M_{SAO} is found by following formulae:

$$M_{SAO} = \sum m_{SAO}(C_i) \tag{2}$$

$$m_{SAO}(C_i) = m_{STD}(C_i) \cdot ORF(C_i) \tag{3}$$

$$ORF(C_i) = \frac{m_{TPO}(C_i)}{m_{TPO}(C_i) + m_{TPG}(C_i) + m_{TFFL}(C_i)}, \tag{4}$$

where $C_i = C_1, C_2, C_3, iC_4, nC_4, iC_5, nC_5, C_{6+}$, $m(C_i)$ equals mass per component, *ORF* (Oil recovery factor) is the measured shrinkage factor for the processing platform, *TFFL* = Total Fuel and Flare, *SAO* = Satellite Allocated Oil, *TPO* = Total Processed Oil and *TPG* = Total Processed Gas.

Satellite field part of fuel and flare is calculated by following formula:

$$M_{SSFF} = M_{TFFL} \cdot \frac{M_{SAO}}{M_{TPO}}, \tag{5}$$

where *SSFF* = Satellite Share of Fuel and Flare.

The conversion of allocated masses to lifting volumes must be done after value adjustment.

$$V_{LIFTING} = \frac{M_{SAO} \pm \Delta M_{TVA}}{\rho_{STORAGE}}, \tag{6}$$

where *TVA* = Technical Value Adjustment.

Lifting volume is each owners part of the satellite fields allocated storage mass

The conversion of satellite allocated masses to volumes for tariff purposes must be done before value adjustment.

$$V_{SAO} = \frac{M_{SAO}}{\rho_{ALLOCATED}} \cdot 6,293 \tag{7}$$

The process tariff is a fee for using the platform facilities. The volume for tariff is found by using allocated mass before value adjustment divided by the satellite fields measured density. Allocated density is found by analysing the crude oil inlet stream before commingling. When using allocated density new fields coming into the platform at a later stage will not influence the existing and negotiated tariff level.

2.2. Technical value adjustment of crude

A technical value adjustment procedure is needed for the crude from the satellite field commingling with the platform crude oil blend. The procedure shall compensate for the difference

in value on mass basis between satellite crude oil and the existing crude oil to storage on the platform.
If the crude from the satellite field has similar composition to the platform blend, the value can be determined on the basis of refinery yields expressed in weight percent cuts as follows:

- Naphtha (20-165°C)
- Jet kerosene (165-250°C)
- Gasoil (250-375°C)
- Atmosph. resid. (375+°C)

The mass to be value adjusted can be whole crude or C_{5+} fraction. If using C_{5+} the originally allocated C_{4-} mass will be added unchanged to the allocated and value adjusted C_{5+} mass.

If the crudes to be commingled vary in composition and density there often arises a need for splitting the atmospheric residue cut into a vacuum gasoil cut and a vacuum residue cut (see Figure 3).

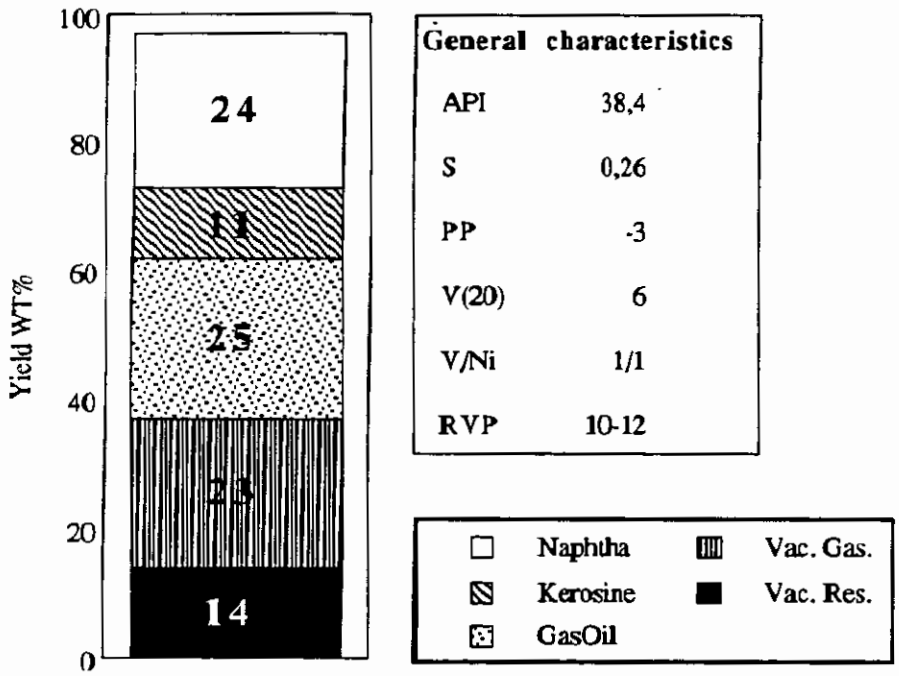

Figure 3. Crude composition.

A stream of *e.g.* condensate commingled with a heavier crude quite often needs a commercially orientated cap because the increased marked value of the common blend will not cover the value transfer caused by the procedure.

The following adjustments to the fractions will be implemented:

- Naphtha: no quality adjustment
- Jet kerosene: density adjustment
- Gasoil: density adjustment
- Atm. residue: sulphur and viscosity adjustment

The basis for determination of the commercial value of the yields, can be the prices quoted per

metric ton for naphtha, jet kerosene, gasoil and fuel oil, published as the *European Bulk* quotation for cargoes *CIF North West Europe* by *Platt's Marketscan* (Platt's quoted). The value adjustment will be settled monthly in kind, and on a mass basis.

2.3. Commingling of pressurised crude between existing platforms

Figure 1 shows commingling of pressurised crude. *Platform A* delivers crude with a gas oil ratio of about *20*. When arriving at *platform C* the crude is boosted up to *60* bar, routed and commingled with unstabilized platform crude (much higher gas/oil ratio) at *platform D* or *E*.

The crude from *platform A* must be metered and sampled. Crude routed to *platform E* is metered by a turbine meter and crude to *platform D* is estimated by difference (total mass delivered from *platform A* minus mass to *platform E*).

Formulae with measured shrinkage factors (*ORF*) cannot be used. The alternative will be to use shrinkage factors from a process simulator (*SORF*) where input data are, separator configuration, composition, temperature and pressure.

Allocation between platforms:

$$M_{APLA} = \sum m_{APLA}(C_i) \tag{8}$$

$$m_{APLA}(C_i) = m_{DPLA}(C_i) \cdot SORF(C_i), \tag{9}$$

where *APLA* equals allocated crude from *platform A*, *DPLA* is delivered crude from *platform A* and $SORF(C_i)$ is the Simulated Oil Recovery Factor as a function of the component C_i for *platform A*.

If the crude composition vary, a technical value adjustment procedure must also contain a cap and a vacuum gas oil cut.

3. Choosing the optimal measurement system

In this section, we describe a model for determining an acceptable level of metering uncertainty and calibration frequency in the case of allocation measurements [1]. We show in some detail how the stochastic process representing the *systematic* measurement errors are modelled. Furthermore, we present some typical results from numerical examples, and we show that choosing the optimal measurement system is closely related to risk attitude.

3.1. The model

The problem of choosing a metering system is likely to be viewed differently by the parties involved. We consider three parties who may have conflicting interests: The operator of the mother field (*M*), the operator of the satellite field (*S*) and the government (*G*). The roles played by each of these can be summarized as follows:

M: Produces from the mother field. Owns the process capacity, and collects process tar-

iffs from *S*.

S: Produces from the satellite field. Pays processing tariffs to *M*, which covers the investment and operating costs of the allocation metering system. These tariffs are defined such that, after tax, *M* gets back what it has paid for investment and operating costs assuming the flow measurements are *100%* correct.

G: Demands the payment of taxes from *M* and *S*. Since the taxes depend on total investments and operating costs, as well as *M*'s and *S*'s income, the government partly covers the expenditures of the metering system.

At this point we would like to stress the fact that income and costs not concerning the allocation measurements are omitted. The model is constructed to determine the net present values (*NPV*) of the net economic effect of the measurements, and some statistical results for all three parties involved, as shown in Figure 4.

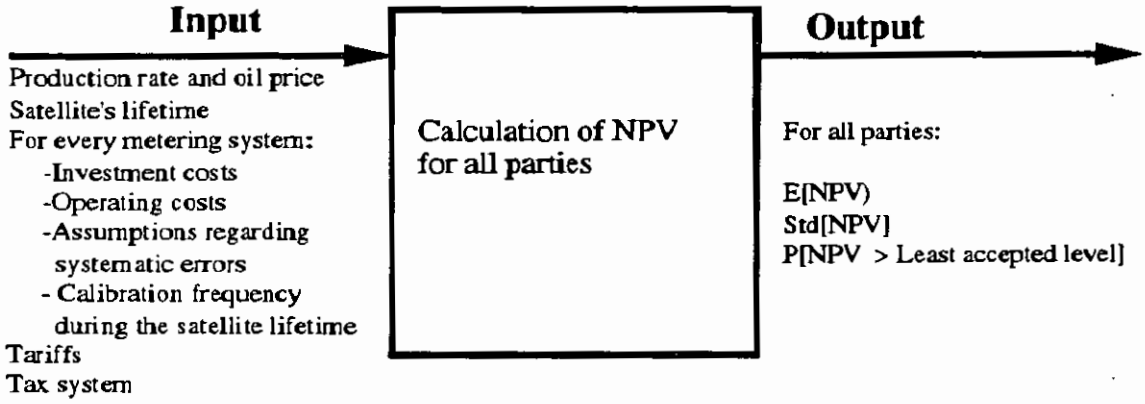

Figure 4. Block scheme of the model

The following input assumptions are made:

- Each metering system is uniquely defined by the measurement inaccuracy, the assumed initial slope of the error growth, and the investment and operating costs.
- Production rates, oil prices, interest rate, processing tariffs and marginal after-tax shares are all constants.
- The calibration costs increase with investment costs.
- The lifetime of the satellite field is *20* years.

In particular the assumption concerning constant oil prices and production rates etc., are obviously one of the weaknesses in our calculations. In addition *M* and *S* will undoubtedly have different positions for tax payment through a period of *20* years. However, the more complex the model is, the more difficult it is to interpret the results. The model, however, is constructed to handle variable oil prices, production rates and processing tariffs. We assume that the satellite field has a lifetime *T*, which is divided into *n* (not necessarily equally long) sub-periods. We also assume that the metering system is calibrated once in every sub-period. Calibration costs are a part of the total operating costs for the allocation measurements.

As output the model simulates mean and expected *NPV* (*E* [*NPV*]) for all parties. Also the

standard deviation of the *NPV* (*std* (*NPV*)) is estimated. To be able to determine an acceptable level of measurement uncertainty, the probability for the simulated mean *NPV* to exceed a least accepted *NPV* level ($P[NPV > NPV_{min}]$) for each party is calculated.

In Figure 5 below, we illustrate the problem under study. We consider the allocation meter to be encumbered with systematic measurement errors, whereas the flow of processed petroleum is measured precisely. The latter assumption is made for analytical simplicity; the model can easily be generalized to cover inaccurate measurement of processed products as well.

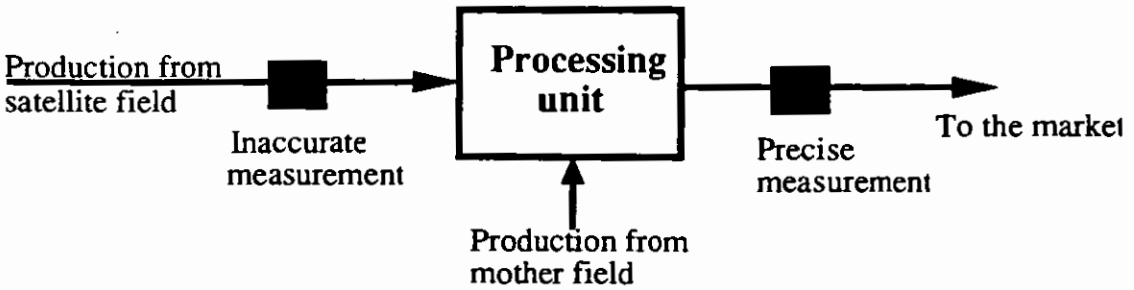

Figure 5. Allocation model.

We have included the government in our analysis because of the importance of taxes, and also because government legislation may in some cases be decisive in the choice of measurement technology. On the Norwegian Continental Shelf, rather detailed regulations concerning measurement accuracy apply. The model may therefore indicate whether or not such legislations are rational, even from the government's point of view.

3.2. Modelling of systematic errors

One of the most important parts of the model is the representation of systematic measurement errors. In this work, these are modelled as a special stochastic process. We assume that every metering system is characterized by an initial error. This error is modelled as random, and is assumed to be normally distributed with zero mean and technology dependent standard deviation. Table 1 shows the two descriptive parameters for the metering systems we have used in our calculations.

Table 1. Cost and maximum initial error for the metering systems. NOTE: 1 dollar is about 7 NOK.

Metering system	Cost [mill. NOK]	Max. init. error [%]
Meter 1	5	8
Meter 2	10	5
Meter 3	20	3
Meter 4	30	0,5
Meter 5	50	0,2

Furthermore, we assume that the metering system has a systematic error growth in each interval between two calibrations. Figure 6 is a simulation of an orbit for the total systematic error for *meter 1*, X_1, with calibration every month during one year.

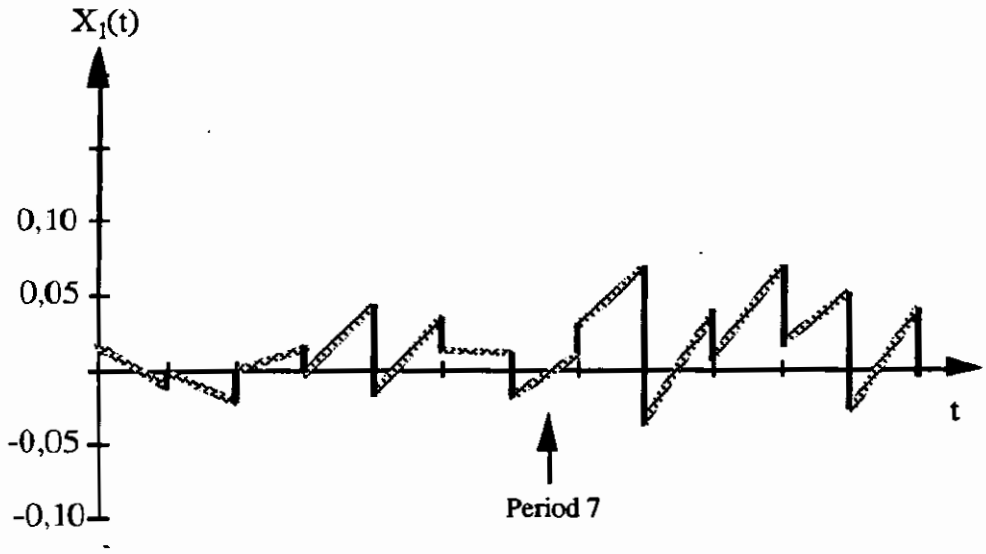

Figure 6. A simulated orbit for the total systematic error with initial error growth assumed to be zero. The meter is calibrated every month during one year. Note: $X_1(t) = 0{,}05$ means 5% overestimation at time t.

Briefly, the stochastic process for the total systematic errors can be described as follows: Before the first "off-shore calibration", the trend of the error growth, if there is any, is assumed to be known. After this calibration, we expect that the systematic error growth will continue as in the first period. More precisely, the slope of the expected error growth in period k equals the actual slope of the error growth in period $k - 1$. This is used to calculate the conditional mean of the measurement errors before calibration, which we assume to be normally distributed. The standard deviation of these errors are proportional to the time interval between two calibrations. The study is performed for two values of this proportional coefficient. To simplify, the sequence of initial meter errors after calibration is modelled to be independent of each other. The stochastic process for total systematic error is non-Markovian since what is expected to happen in the future is dependent of what has happened in the past. Figure 6 illustrates this phenomenon from *period 7* to *period 12*, where the error growth in one period is "approximately equal" to the error growth in the preceding period.

3.3. Simulations

In this work we have studied the *NPV*'s, using imaginary data, concerning only the allocation measurements for different metering system as a function of four variable quantities. These are the calibration frequency, the initial slope of the error growth, the calibration and the metering investment costs. In the model the systematic errors are described using Monte Carlo simulation for the stochastic process. An example of a possible orbit for the total systematic error is shown in Figure 6. These values are then used to calculate the parties' *NPV*'s and in addition their expectations and standard deviations. This process is repeated $N = 2000$ times.

Figure 7 to 9 show normalized simulated mean *NPV*'s as a function of calibration frequency for M, S and G, respectively. The slope of the initial error growth is zero for all cases. We

assume that *meter 1* (the cheapest and most inaccurate) and *meter 5* (the fiscal type) are used. Let n be the number of subdivisions of $T = 20$ years. Since there are *365* days and *52* weeks during one year, corresponds to calibrating once a day, $n = 7300$ corresponds to calibrating once every week, $n = 240$ means once every month while $n = 40$ means twice a year. The normalized *NPV* in Figure 8 and 9 (*i.e.* for *S* and *G*) are negative because we only consider the net economic effect of the costs. The more negative the normalized *NPV*, the more loss of money for the party and vice versa.

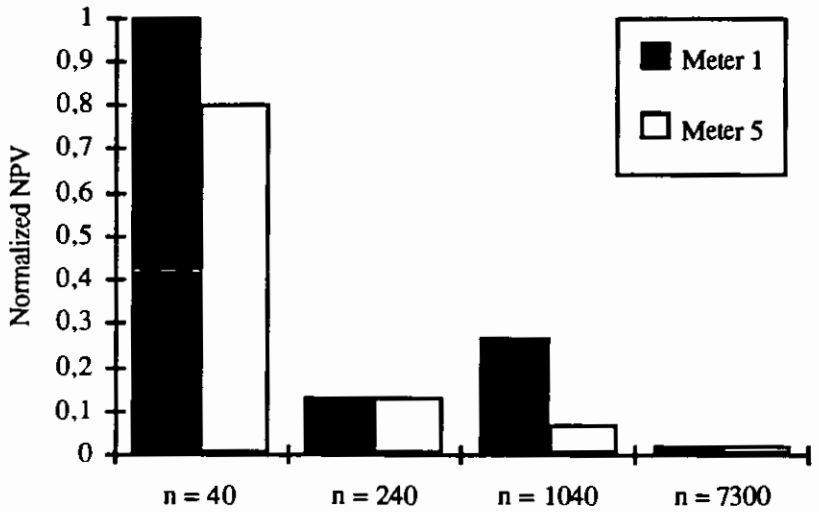

Figure 7. Normalized mean *NPV*'s for *M*, using *meter 1* and *5*, as a function of calibrations during *20* years (n).

The simulations shows (see Figure 7) that the mean *NPV* for the owner of the process capacity (*M*) is decreasing with increasing calibration frequency. In addition it can be observed that the *NPV* is at least as favourable for *meter 1* as for *meter 5*. In Figure 8, that is for the owner of the satellite field, there is obviously no economic agreement for a fiscal metering system with a high calibration frequency. We could also note that *meter 1* (the cheapest and most inaccurate) always implies a higher expected *NPV* compared to *meter 5* (the fiscal type). Figure 9 shows the most striking result in this paper. For the government, the losses are particularly high when the calibration frequency approaches once a day. This should perhaps indicate that it never pays to use a fiscal metering system.

However, there are always two sides to a coin. The other side is the degree of uncertainty we have when using an inaccurate metering system compared to a fiscal one. Using a fiscal metering system with a high calibration frequency implies accurate measurements. But as the total investment and operating costs increases, the expected *NPV* decreases. An inaccurate system with a low calibration frequency gives uncertain measurements, but in return the expected *NPV* is greater than in the first case since the costs are reduced. Without regard to the existing measurement regulations, choosing an optimal metering system is thus a trade-off between lower expected *NPV* and low risk on the one hand, and higher *NPV* and greater risk on the other. This argument confirms what we stated in the beginning: Choosing an optimal measurement system is a matter of risk attitude. To illustrate, consider Figure 10 which is an example of two probability distribution densities with different standard deviations and different expectations. The wider density would correspond to the more inaccurate meter and the narrower to the fiscal meter.

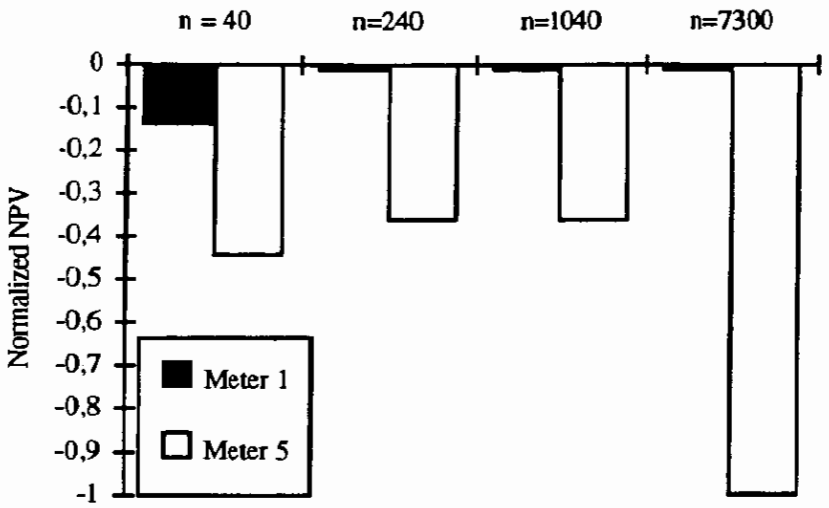

Figure 8. Normalized mean *NPV*'s for *S*, using *meter 1* and *5*, as a function of calibrations during *20* years (*n*).

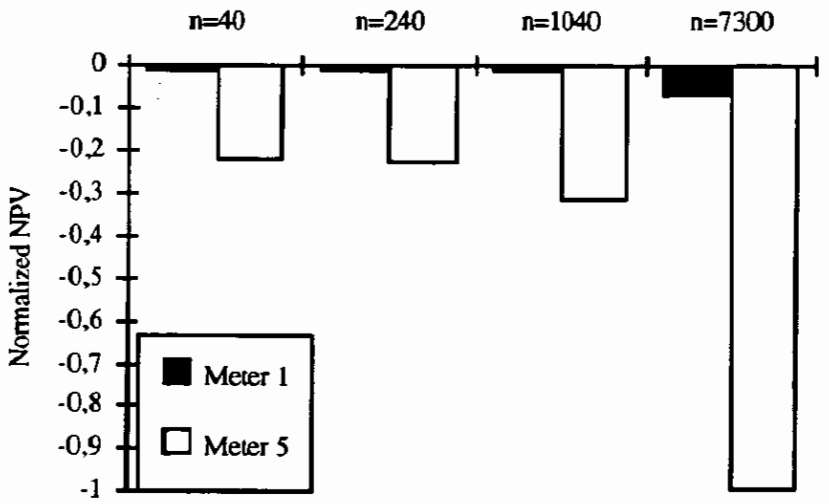

Figure 9. Normalized mean *NPV*'s for *G*, using *meter 1* and *5*, as a function of calibrations during *20* years (n).

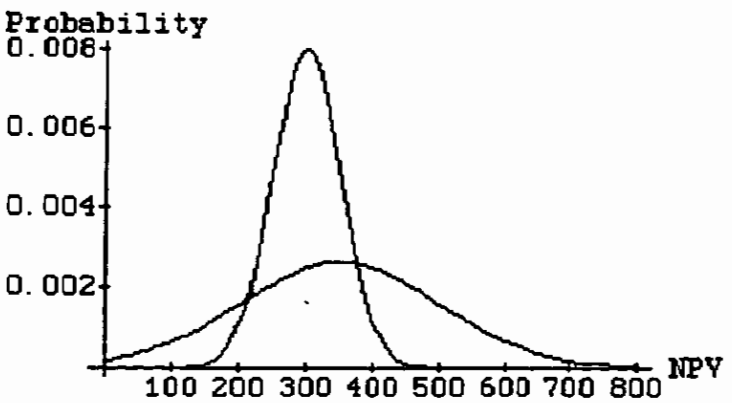

Figure 10. An example of two *NPV* distributions with the *NPV*'s measured in mill. NOK.

4. Conclusions

There is an increasing need for allocation measurements to obtain optimal use of existing process capacity. So far these measurements have been obtained by using turbine meter for the liquid phase and orifice plate for the gas phase. To ensure single phase through the turbine meter and the orifice plate, booster pumps and heaters are needed. Hence, space consuming and expensive installations results. However, the costs may be reduced by using new technology (*e.g.* multiphase flow meters), but this will often implies decreased accuracy and hence not within existing regulations.

There has been developed a model which calculates the net present value as a function of measurement accuracy, production etc. for all involved parties (S, M and G). On the basis of simulations it could be stated that it is never economically to use fiscal metering systems compared to less expensive system for the owner of the satellite field (S) and the government (G). The results also indicates that the NPV decreases with increasing calibration frequency.

There is no reason a priori to believe that a meter neither will consequently under- nor overestimate. Therefore, the results in the case of zero initial slope for the error growth are the most valid and therefore chosen to be presented in this paper. For this case the simulations indicates that fiscal measurement standards is not economically, neither for the owner of the satellite field (S), the owner of the process platform (M) and the government (G).

Today, the regulations for fiscal measurement of oil and gas in the petroleum industry in Norway does not allow the parties to consider the problem above as a decision problem. If there were no regulations, there is no unique answer to question of choosing an optimal measurement system, but it is rather a matter of risk attitude.

References

[1] Nyhus H, Haugland D og Isaksen Ø (1992) *Optimal målenøyaktighet* (*"Optimal measurement accuracy"*) CMR-92-F15019.